REGO-FIX

powRgrip®

PGU-9500

1

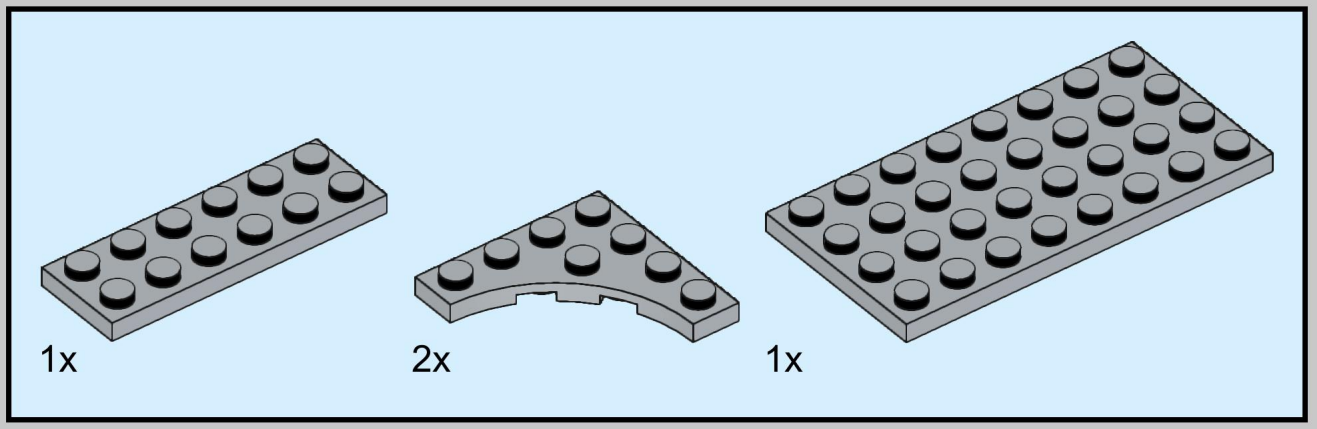

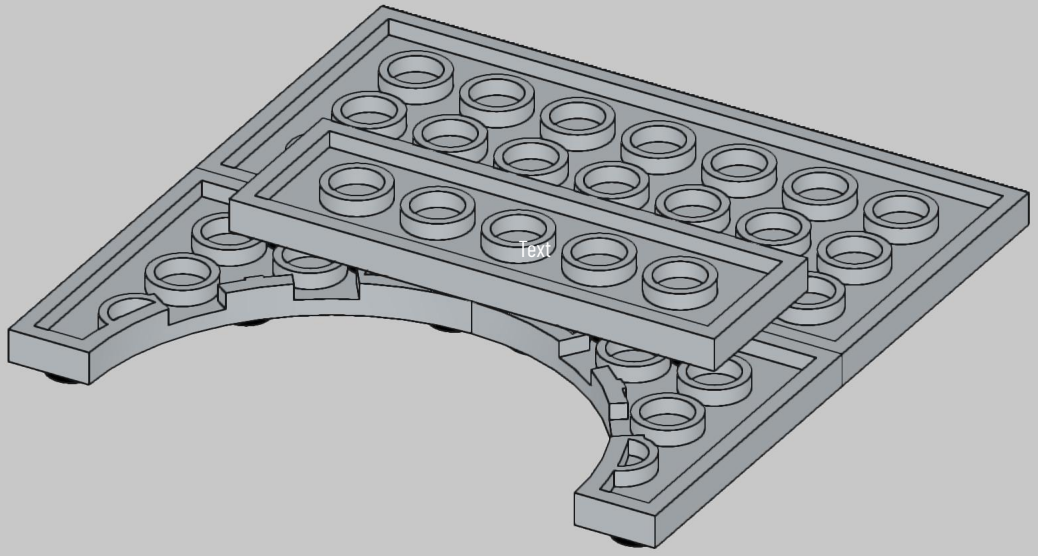

© 2024 WE LOVE WHAT YOU BUILD I wlwyb.com

2

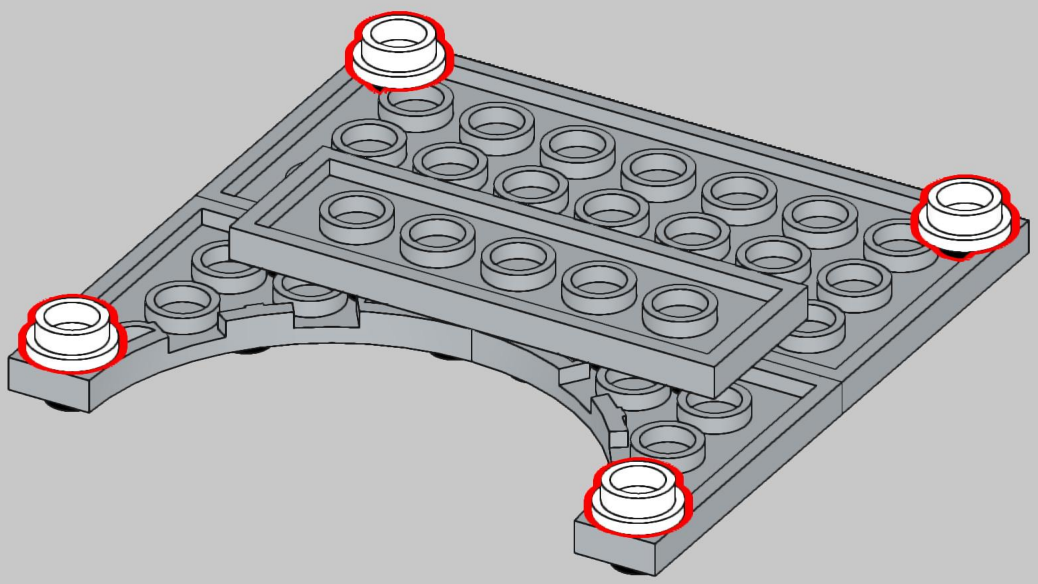

© 2024 WE LOVE WHAT YOU BUILD I wlwyb.com

3

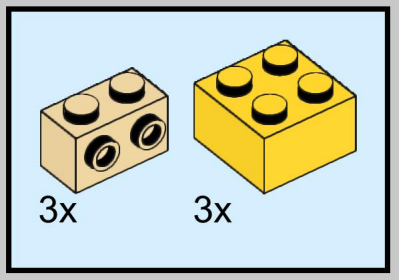

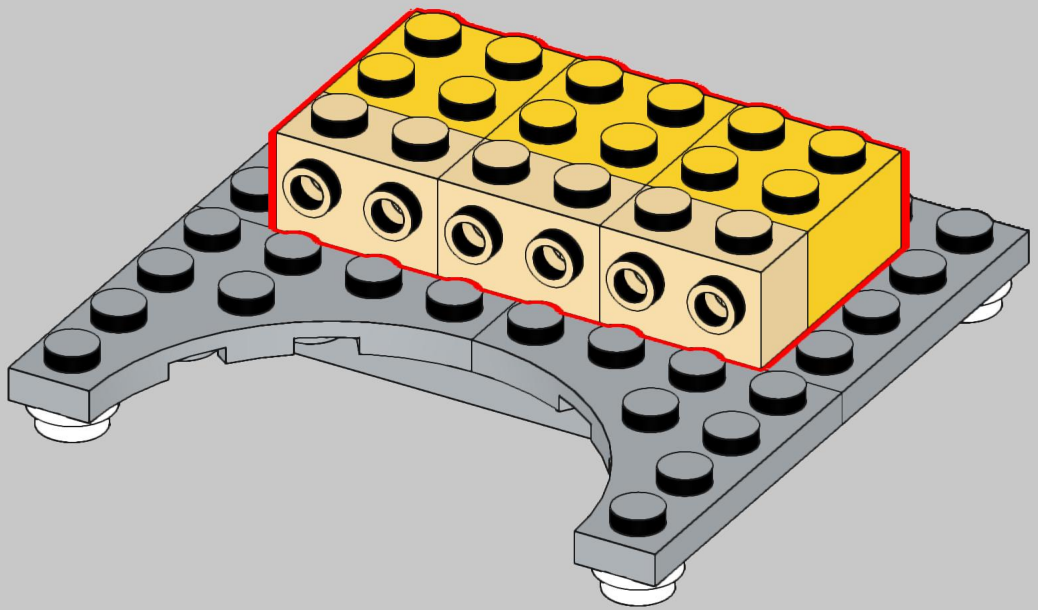

© 2024 WE LOVE WHAT YOU BUILD I wlwyb.com

4

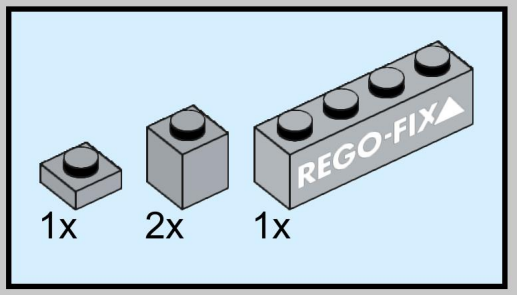

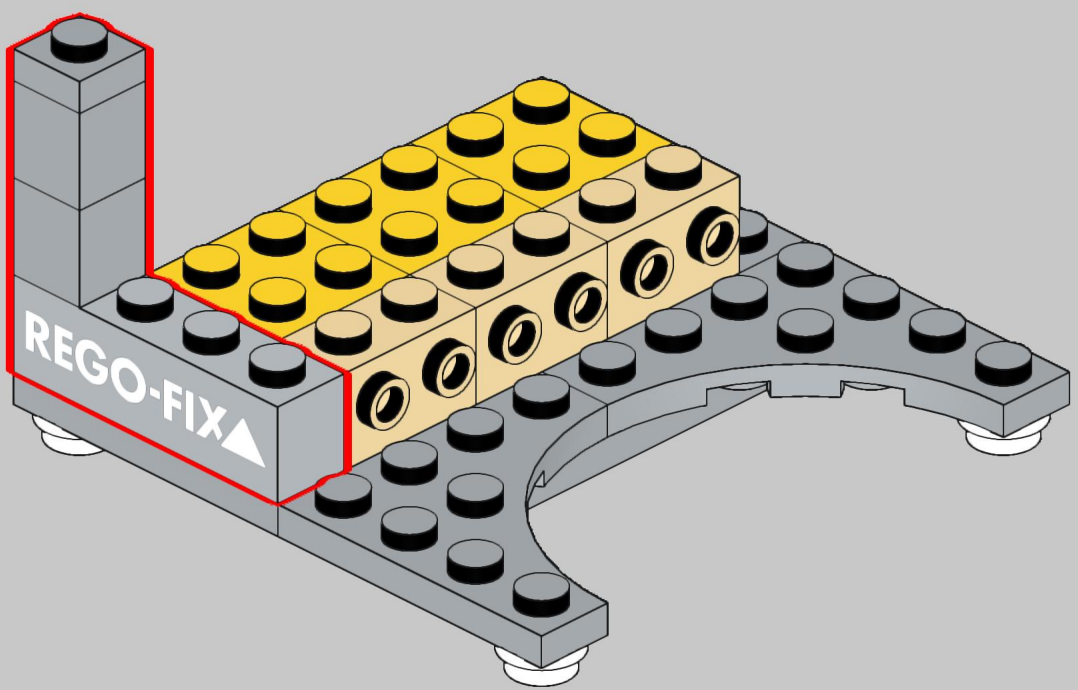

© 2024 WE LOVE WHAT YOU BUILD I wlwyb.com

5

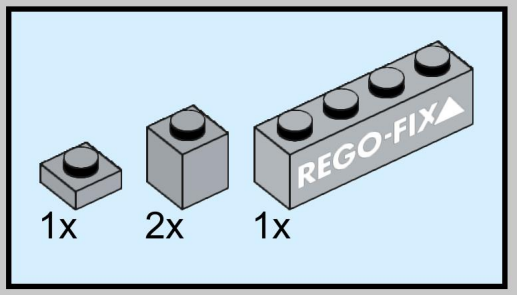

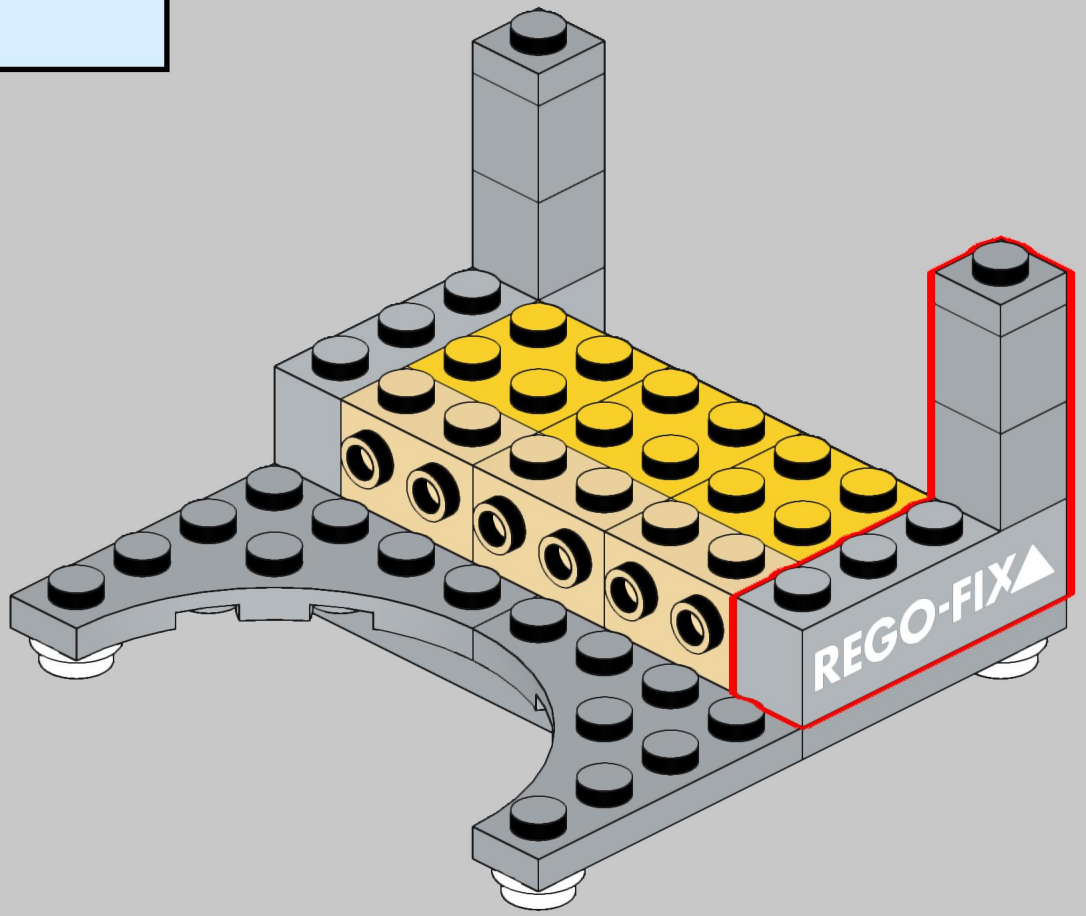

© 2024 WE LOVE WHAT YOU BUILD I wlwyb.com

6

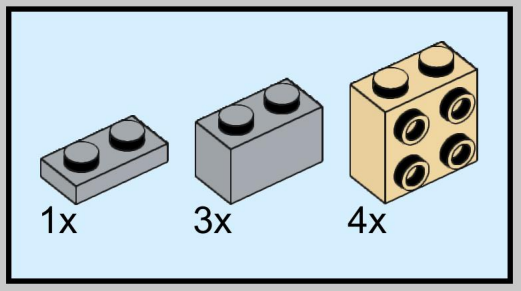

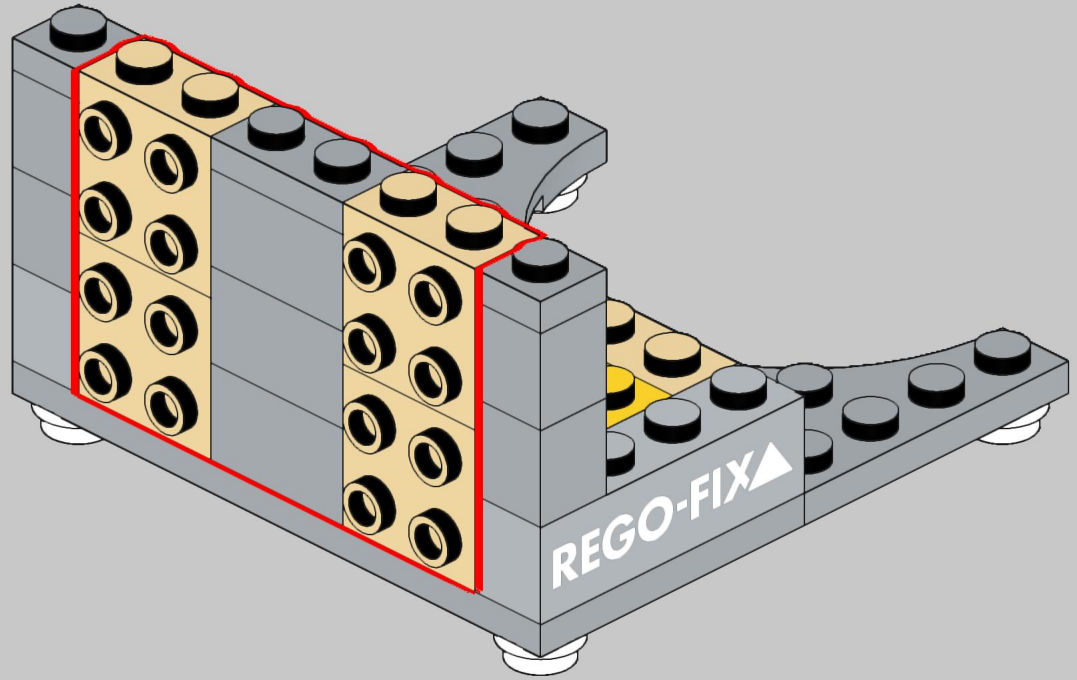

© 2024 WE LOVE WHAT YOU BUILD I wlwyb.com

7

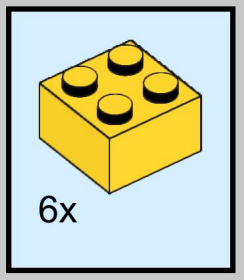

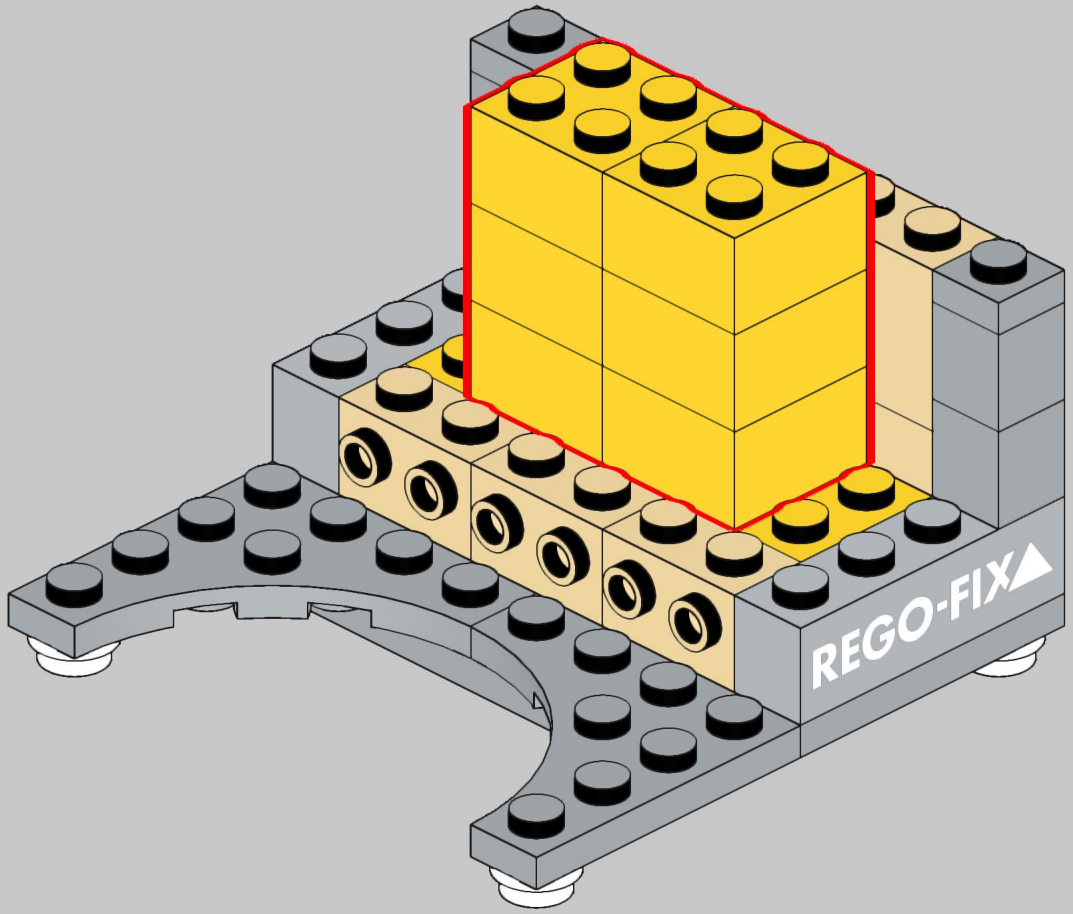

© 2024 WE LOVE WHAT YOU BUILD I wlwyb.com

8

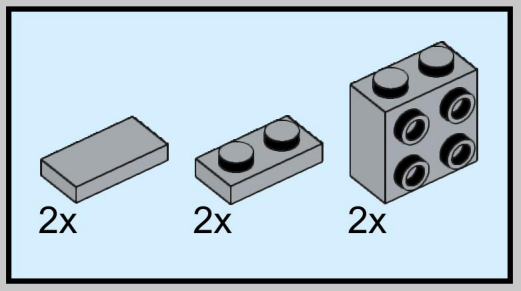

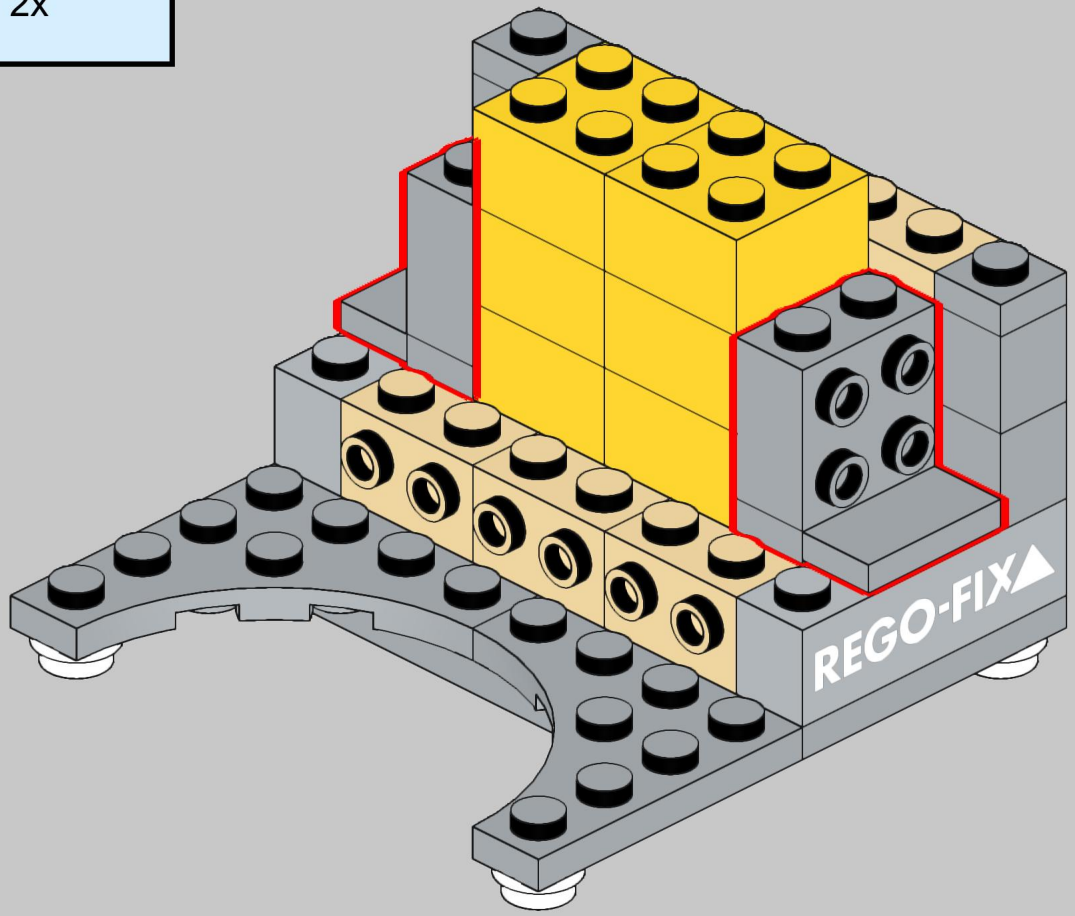

© 2024 WE LOVE WHAT YOU BUILD I wlwyb.com

9

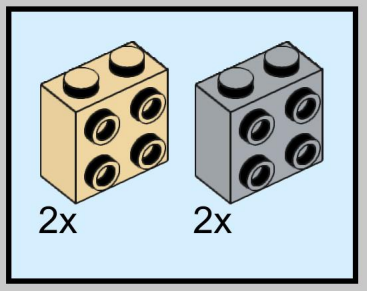

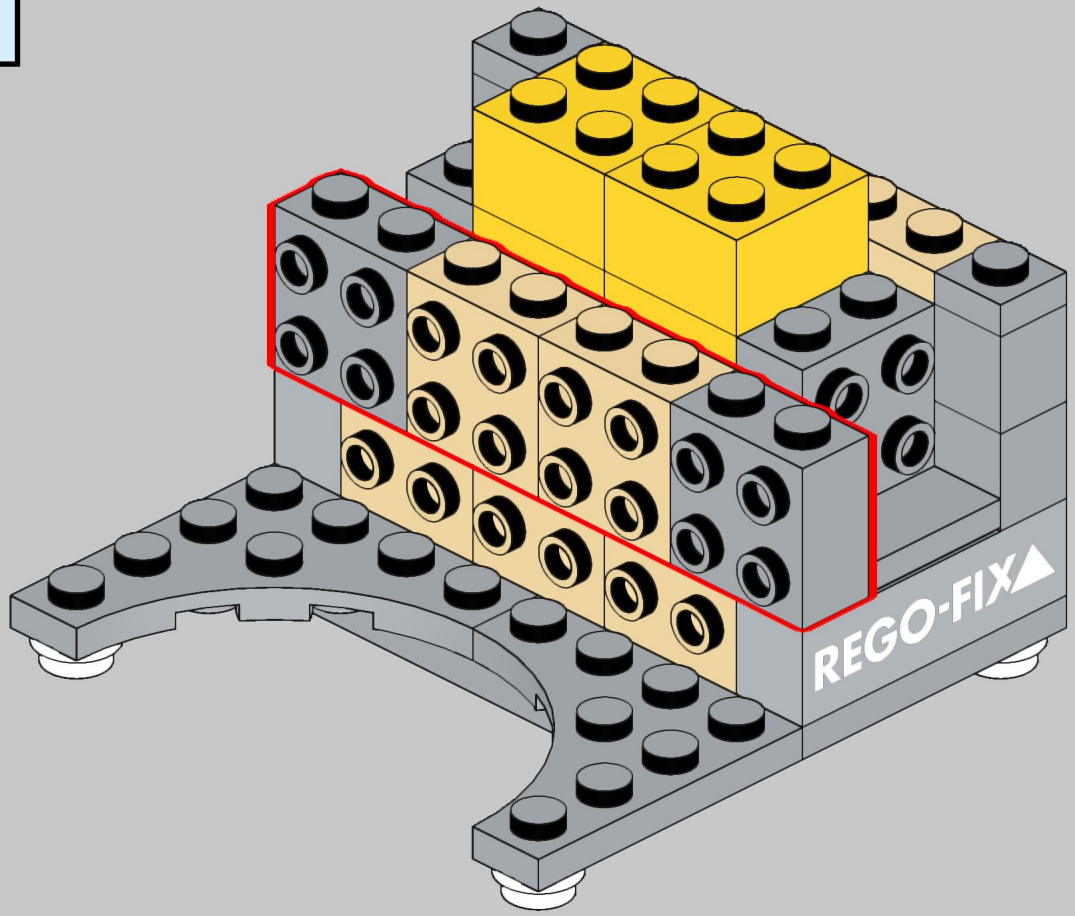

© 2024 WE LOVE WHAT YOU BUILD I wlwyb.com

10

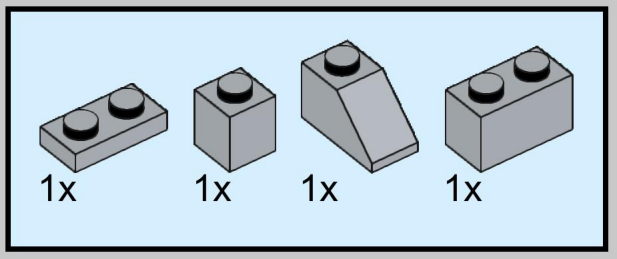

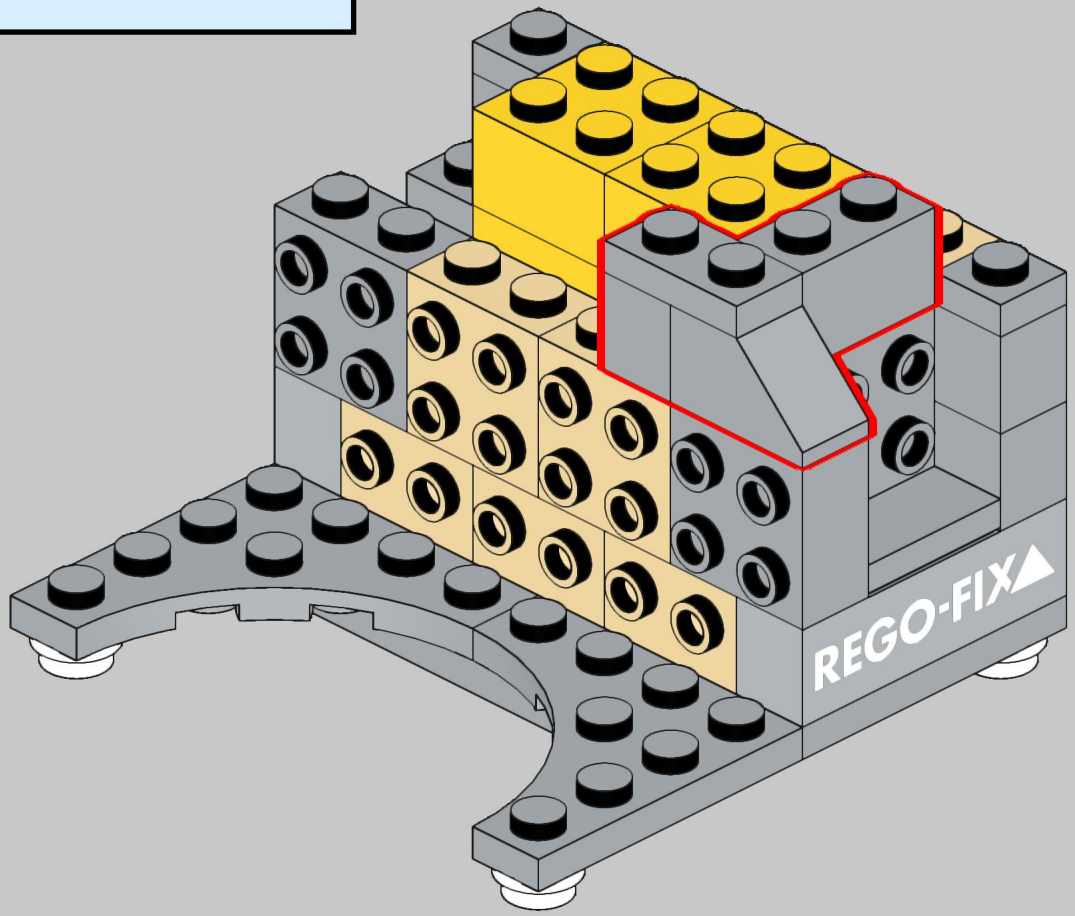

© 2024 WE LOVE WHAT YOU BUILD I wlwyb.com

11

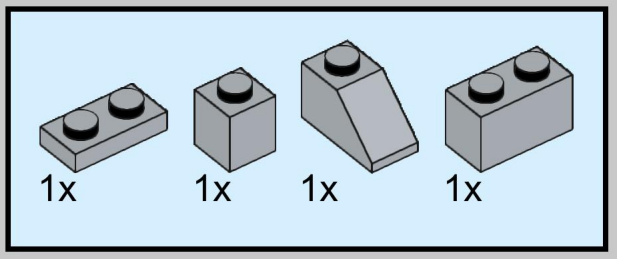

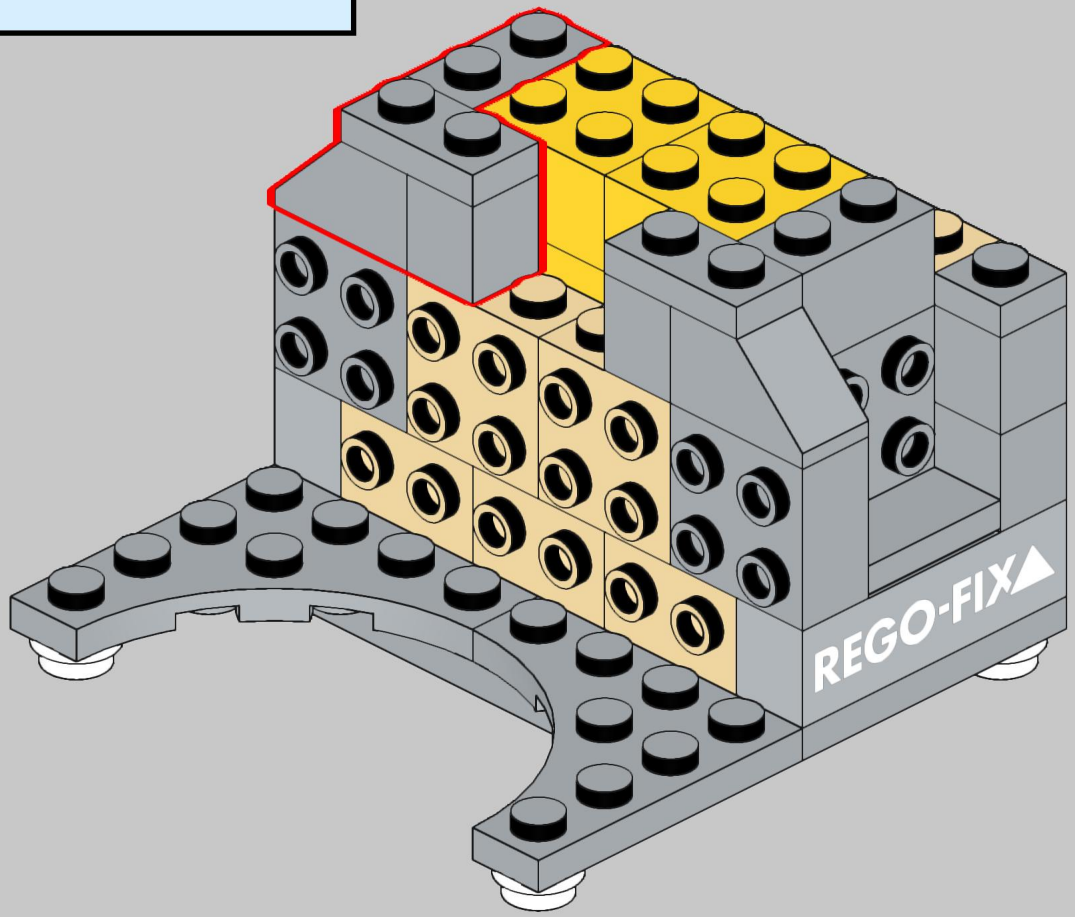

© 2024 WE LOVE WHAT YOU BUILD I wlwyb.com

12

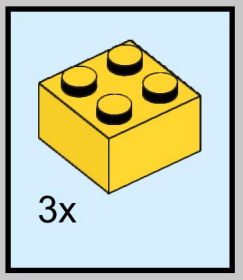

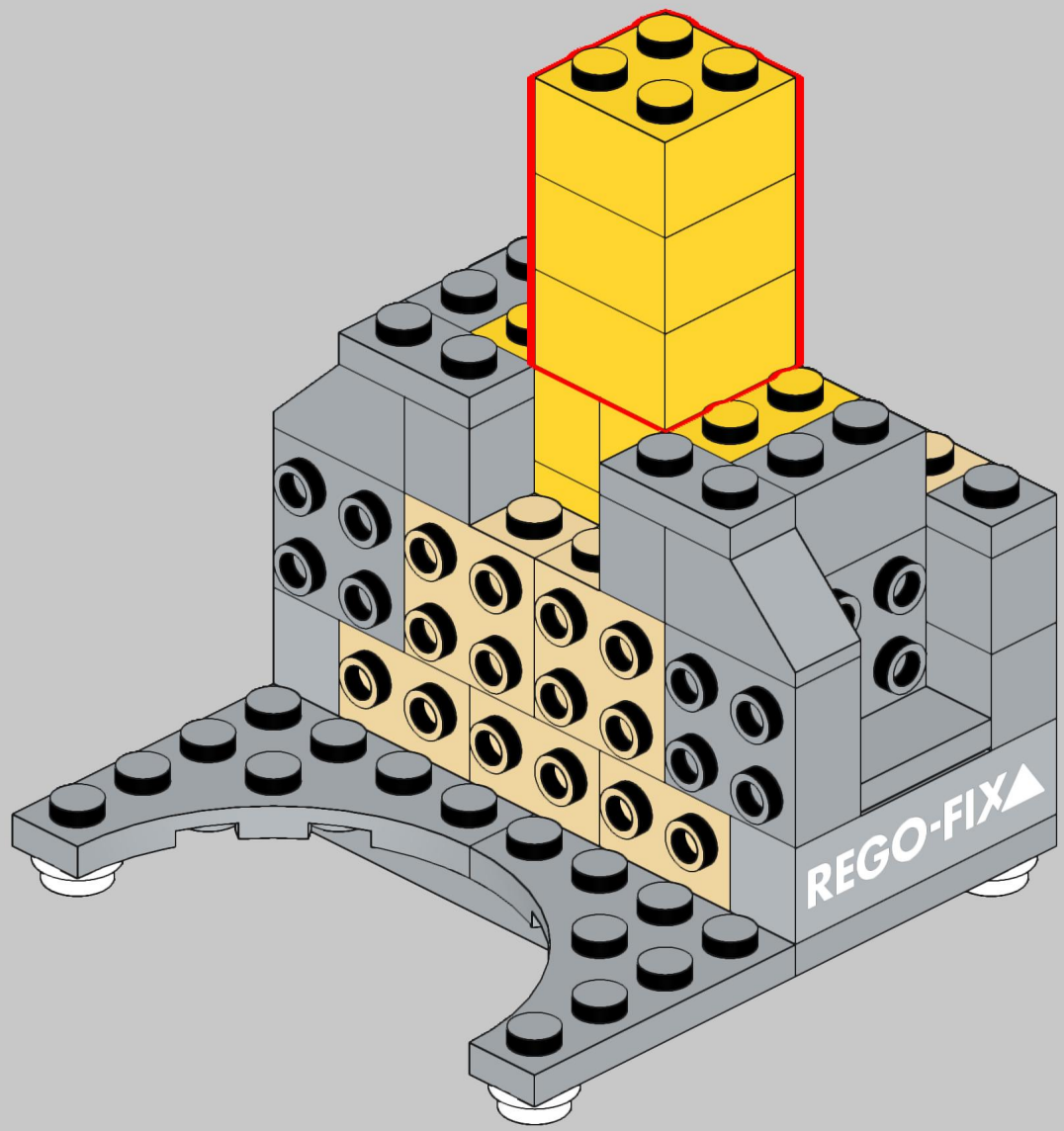

© 2024 WE LOVE WHAT YOU BUILD I wlwyb.com

13

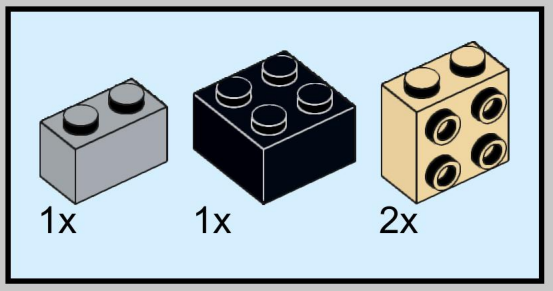

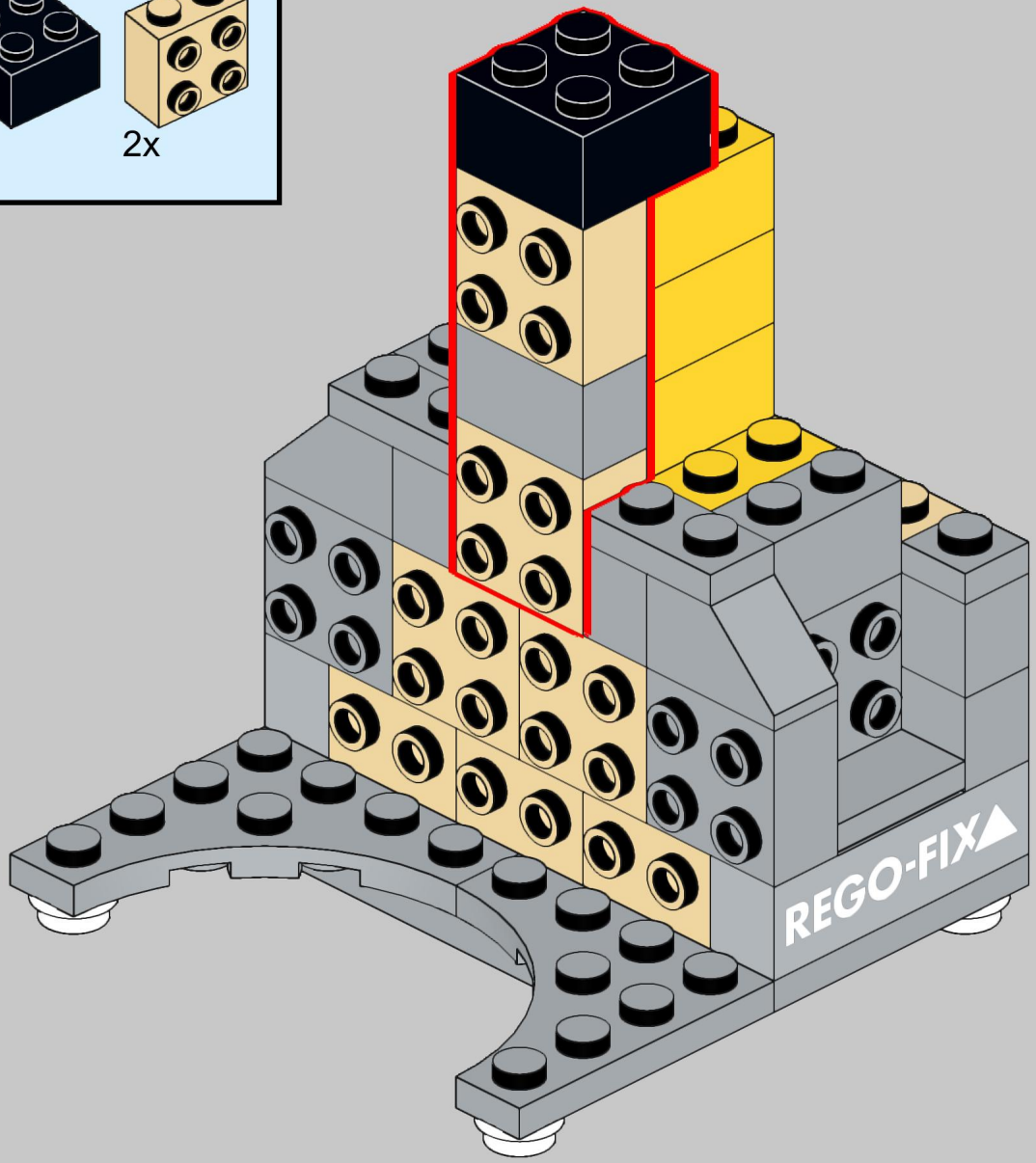

© 2024 WE LOVE WHAT YOU BUILD I wlwyb.com

14

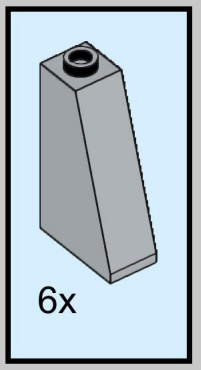

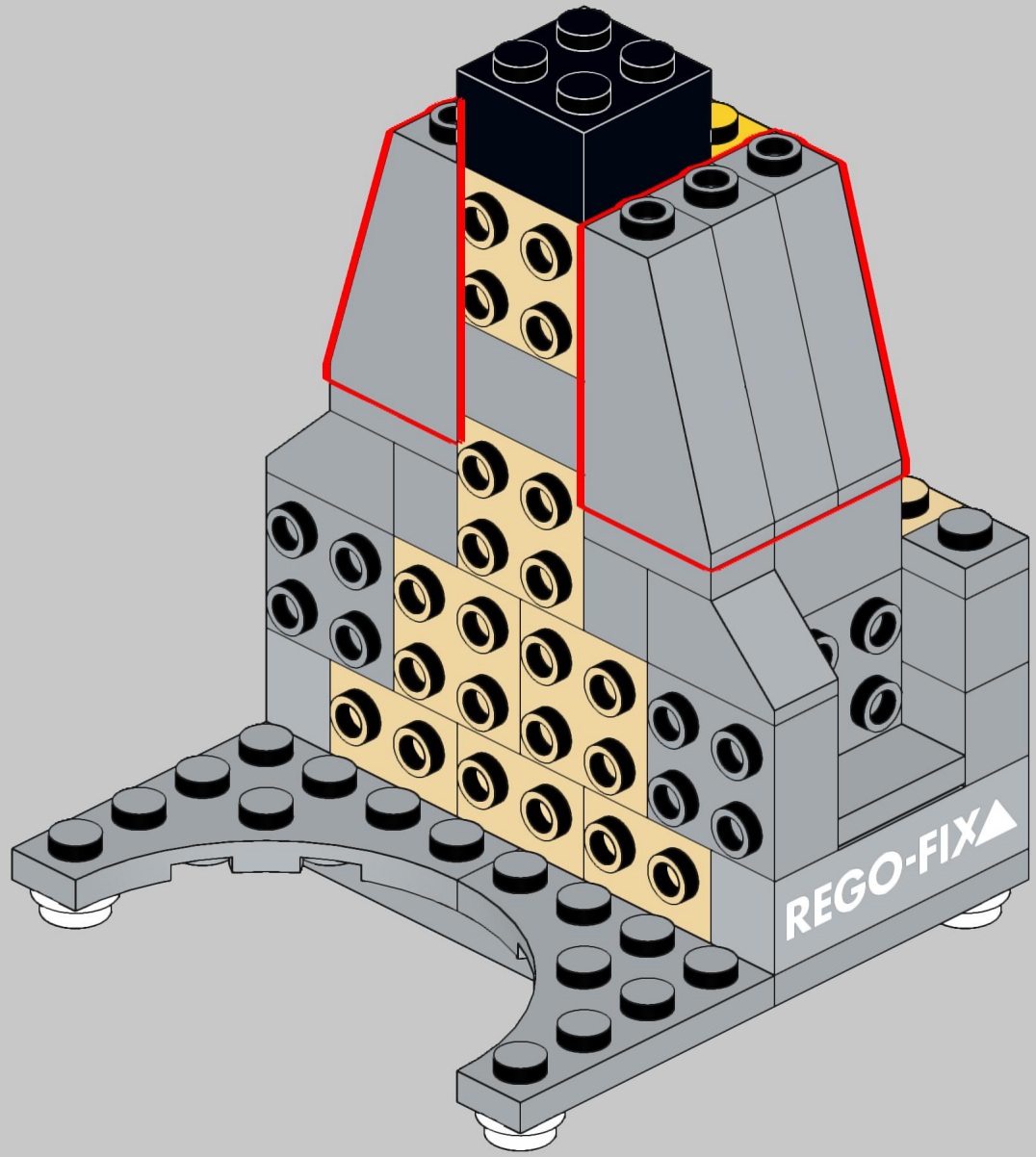

© 2024 WE LOVE WHAT YOU BUILD I wlwyb.com

15

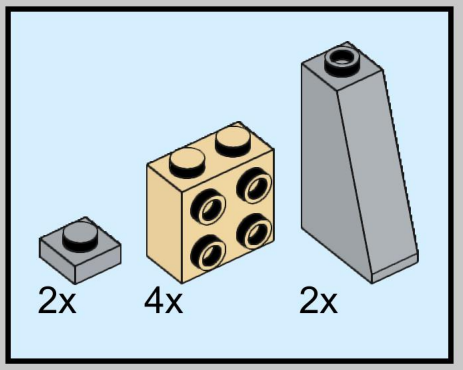

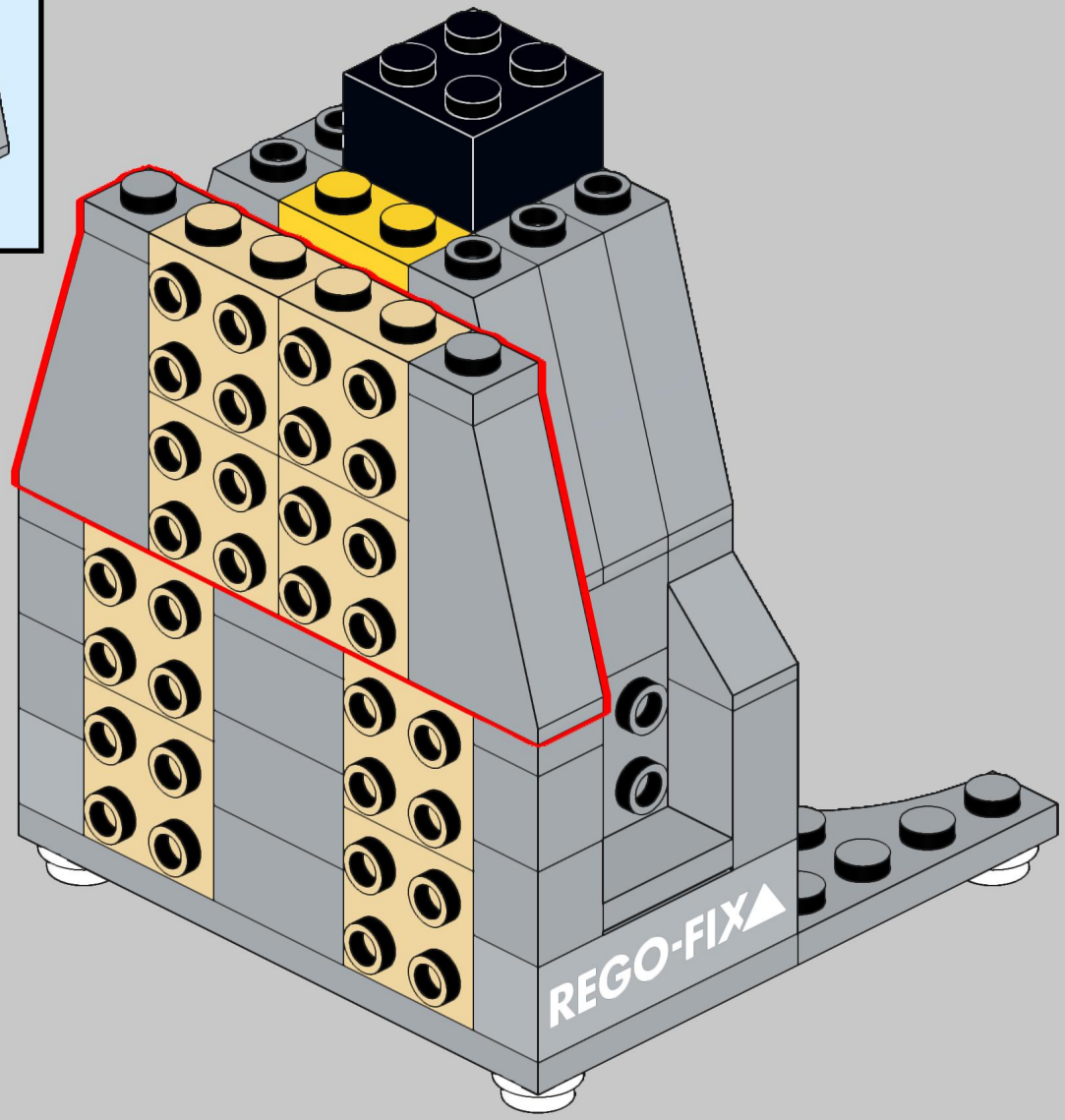

© 2024 WE LOVE WHAT YOU BUILD I wlwyb.com

16

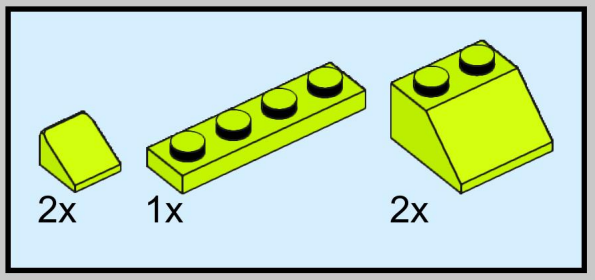

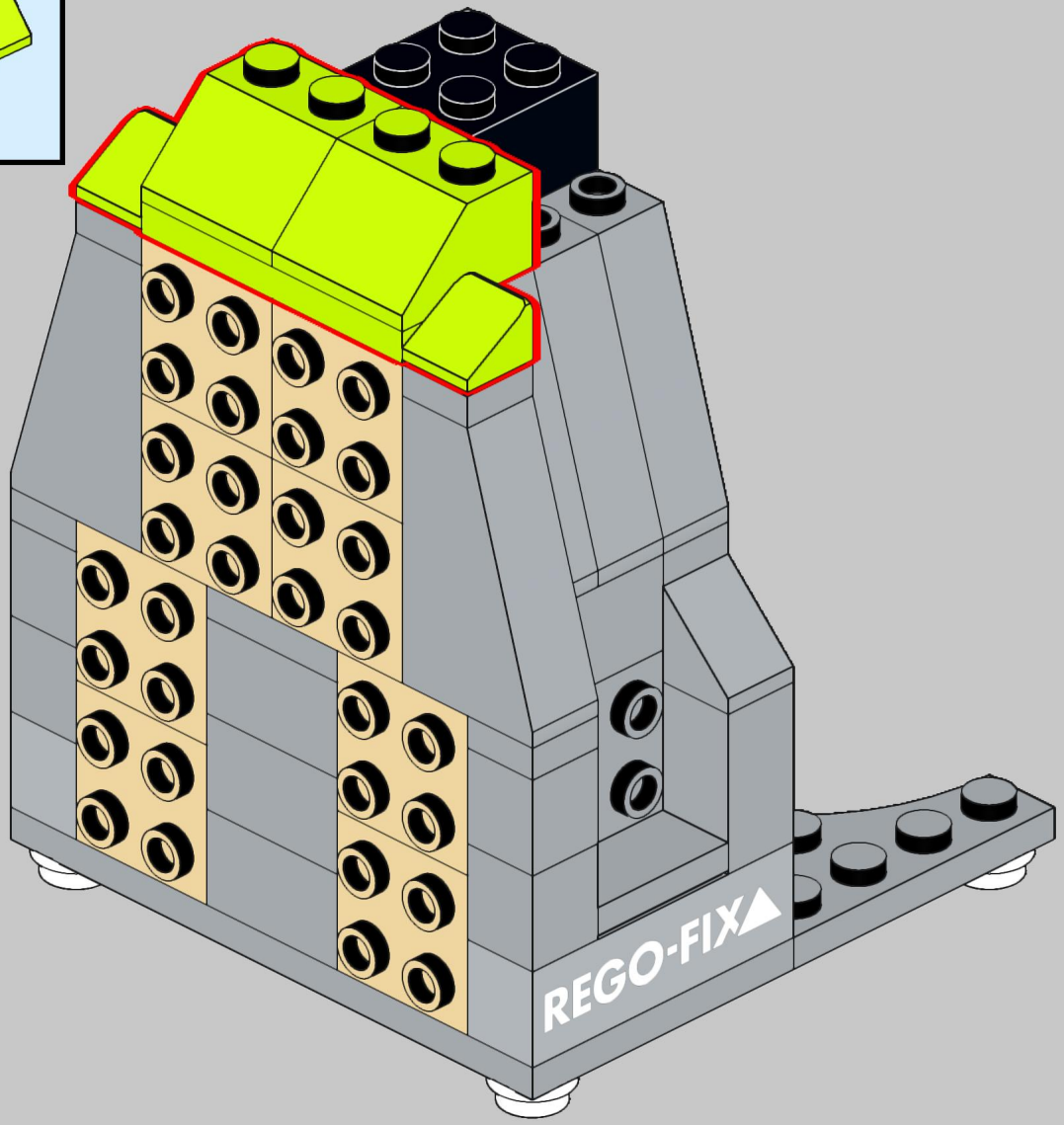

© 2024 WE LOVE WHAT YOU BUILD I wlwyb.com

17

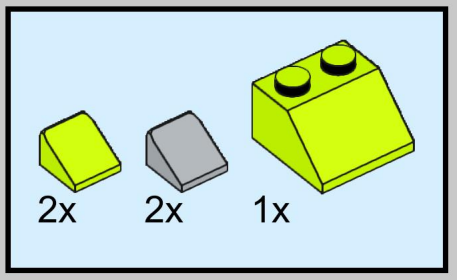

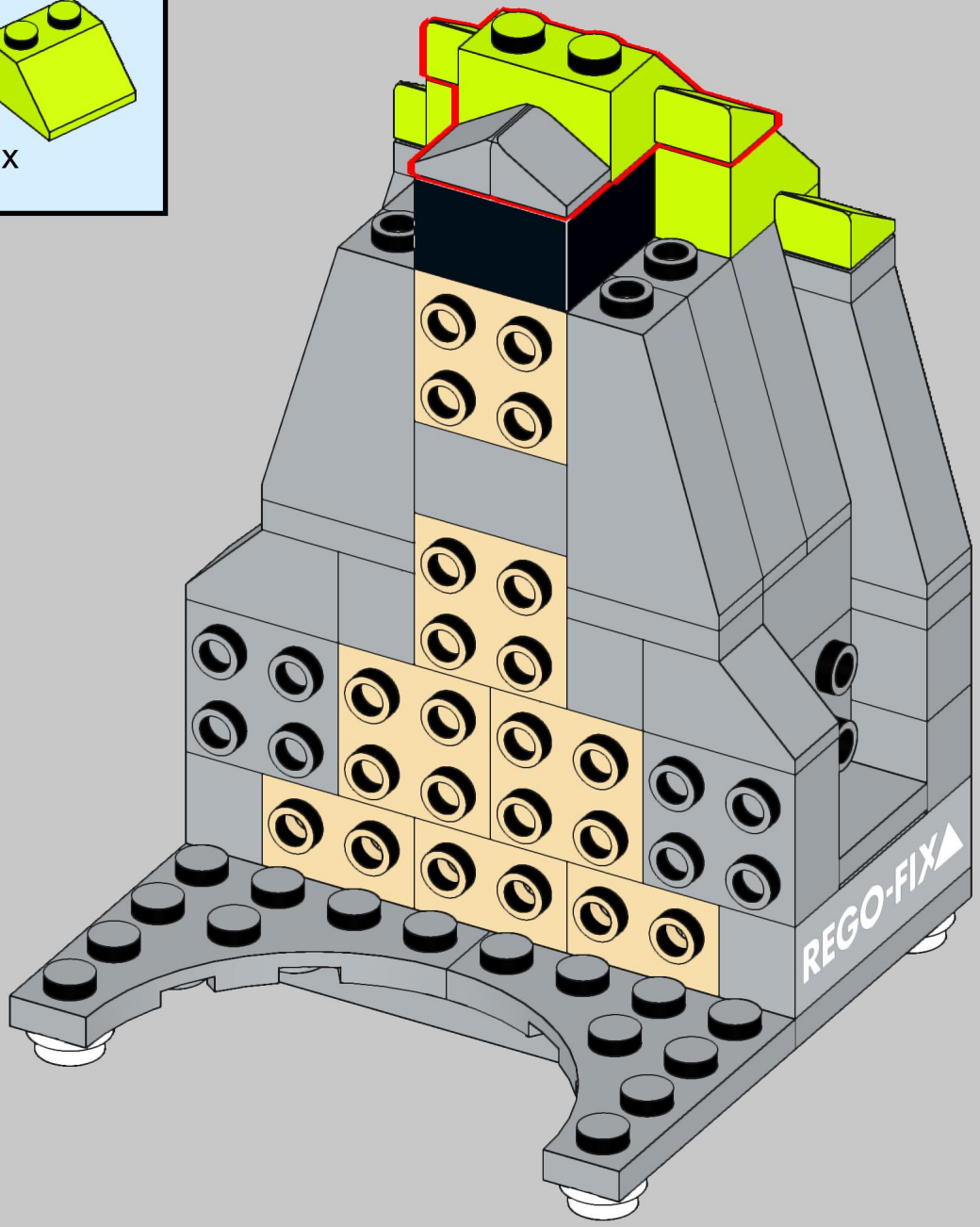

© 2024 WE LOVE WHAT YOU BUILD I wlwyb.com

18

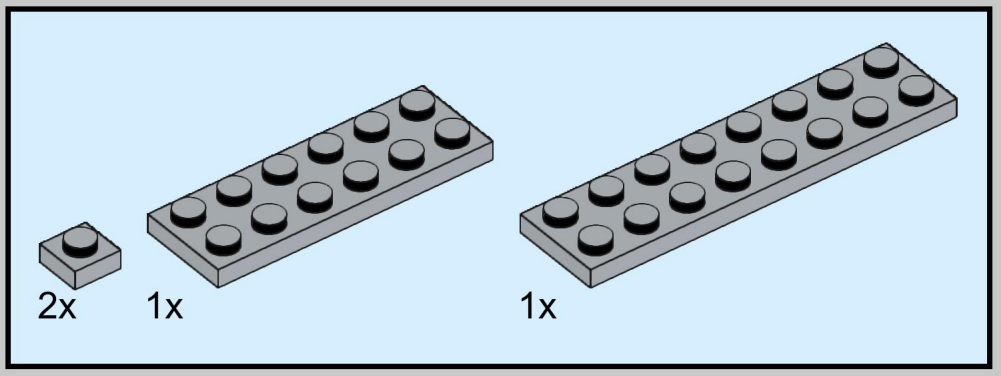

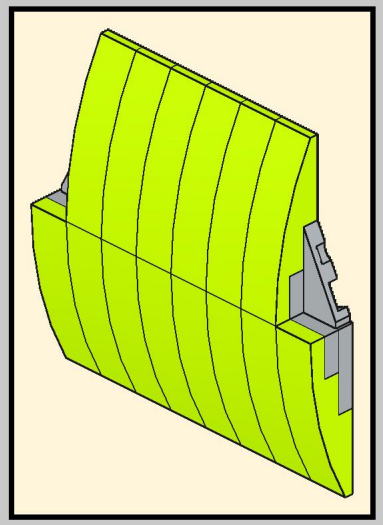

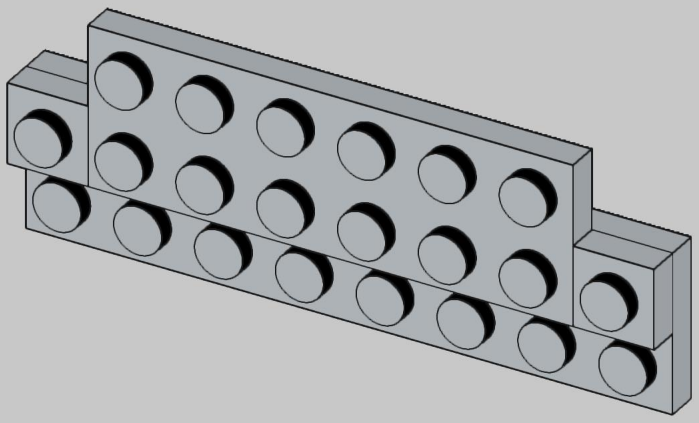

© 2024 WE LOVE WHAT YOU BUILD I wlwyb.com

19

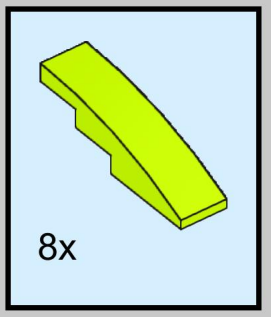

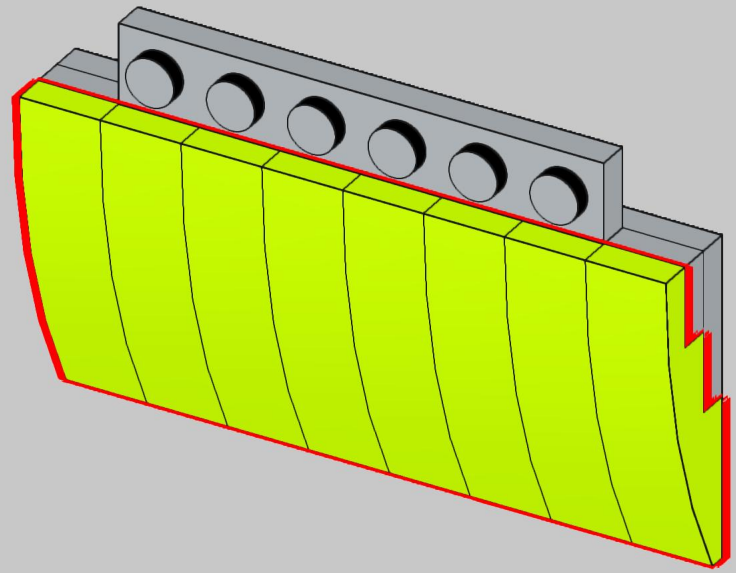

© 2024 WE LOVE WHAT YOU BUILD I wlwyb.com

20

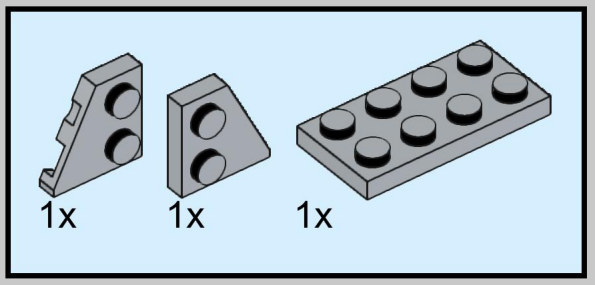

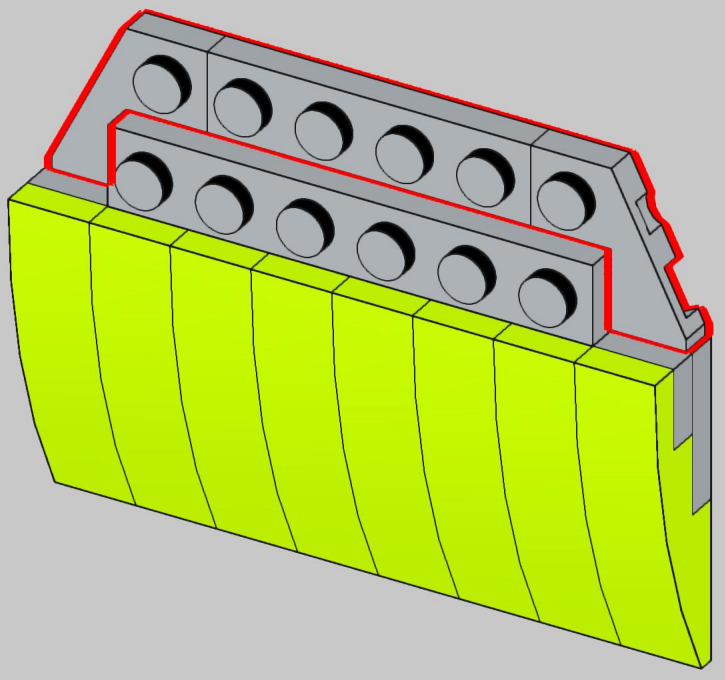

© 2024 WE LOVE WHAT YOU BUILD I wlwyb.com

21

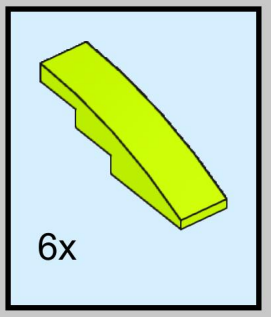

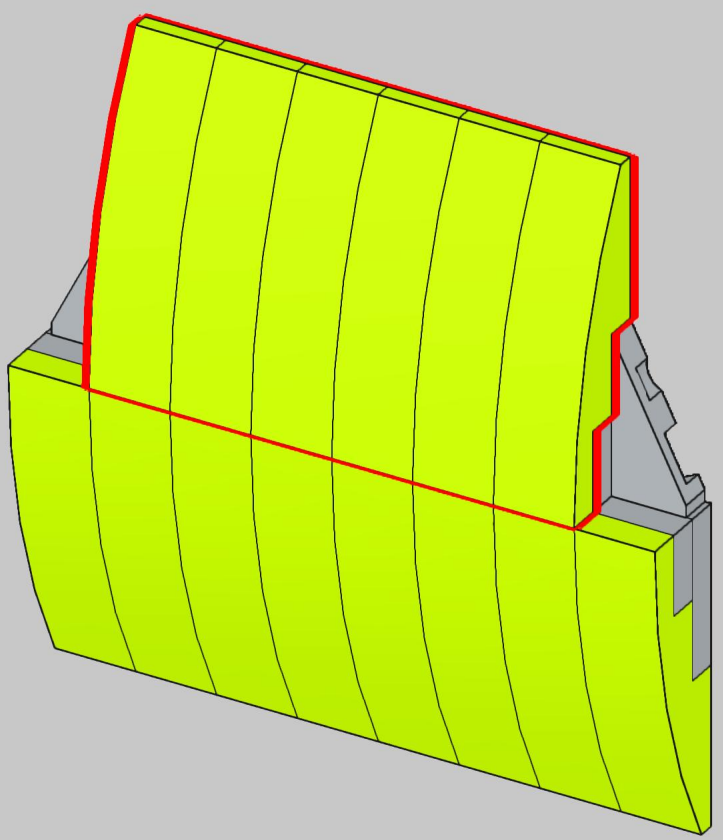

© 2024 WE LOVE WHAT YOU BUILD I wlwyb.com

22

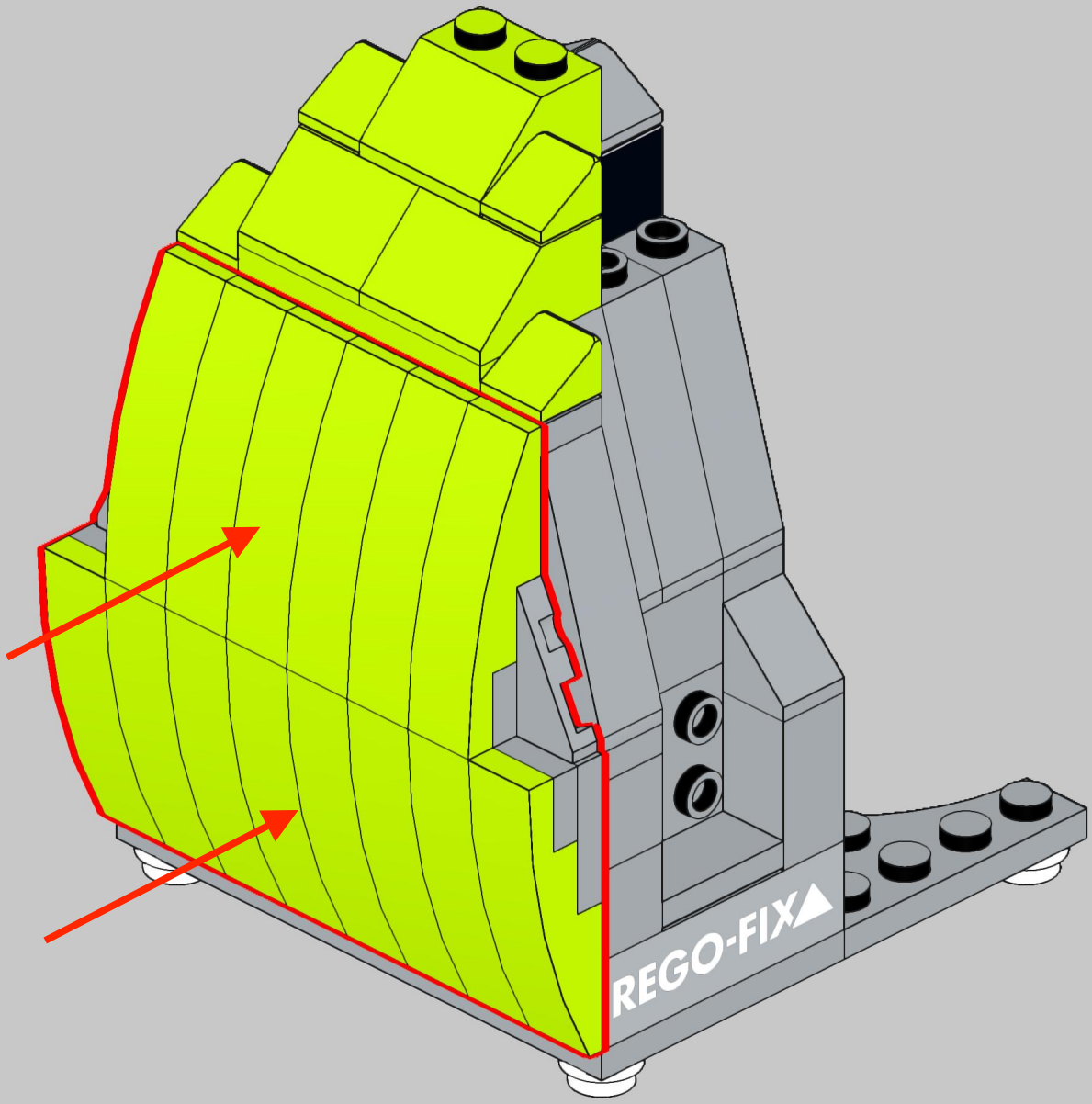

© 2024 WE LOVE WHAT YOU BUILD I wlwyb.com

23

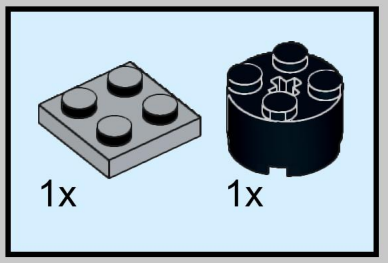

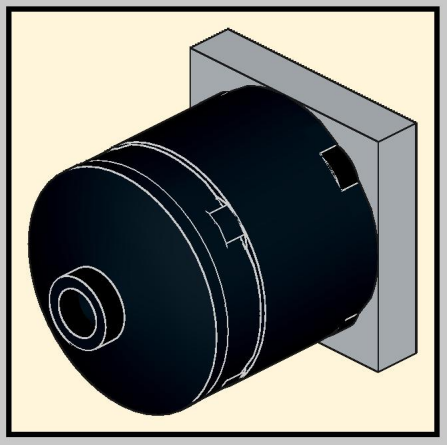

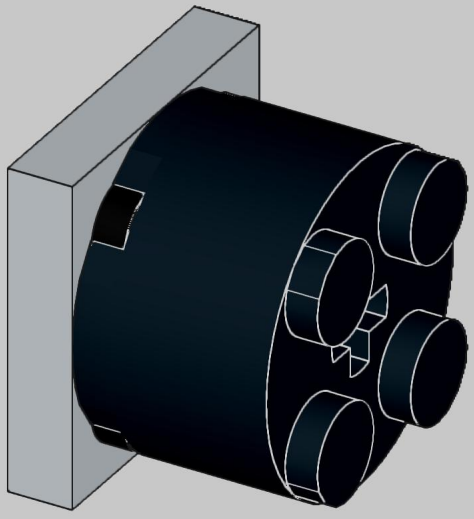

© 2024 WE LOVE WHAT YOU BUILD I wlwyb.com

24

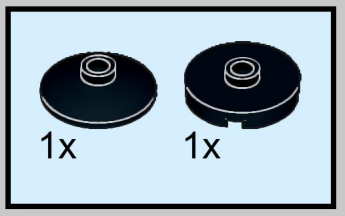

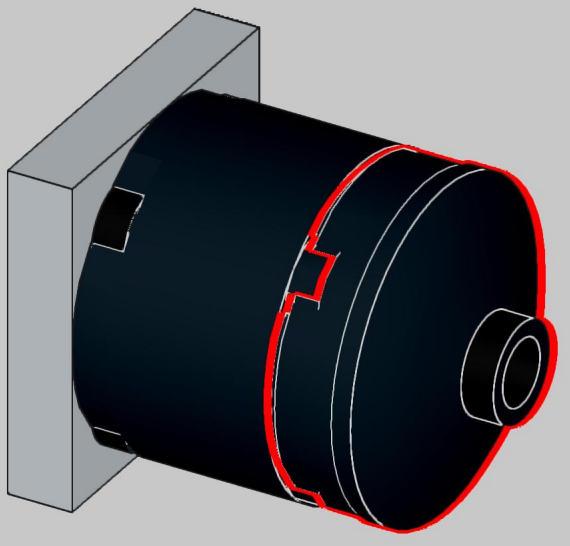

© 2024 WE LOVE WHAT YOU BUILD I wlwyb.com

25

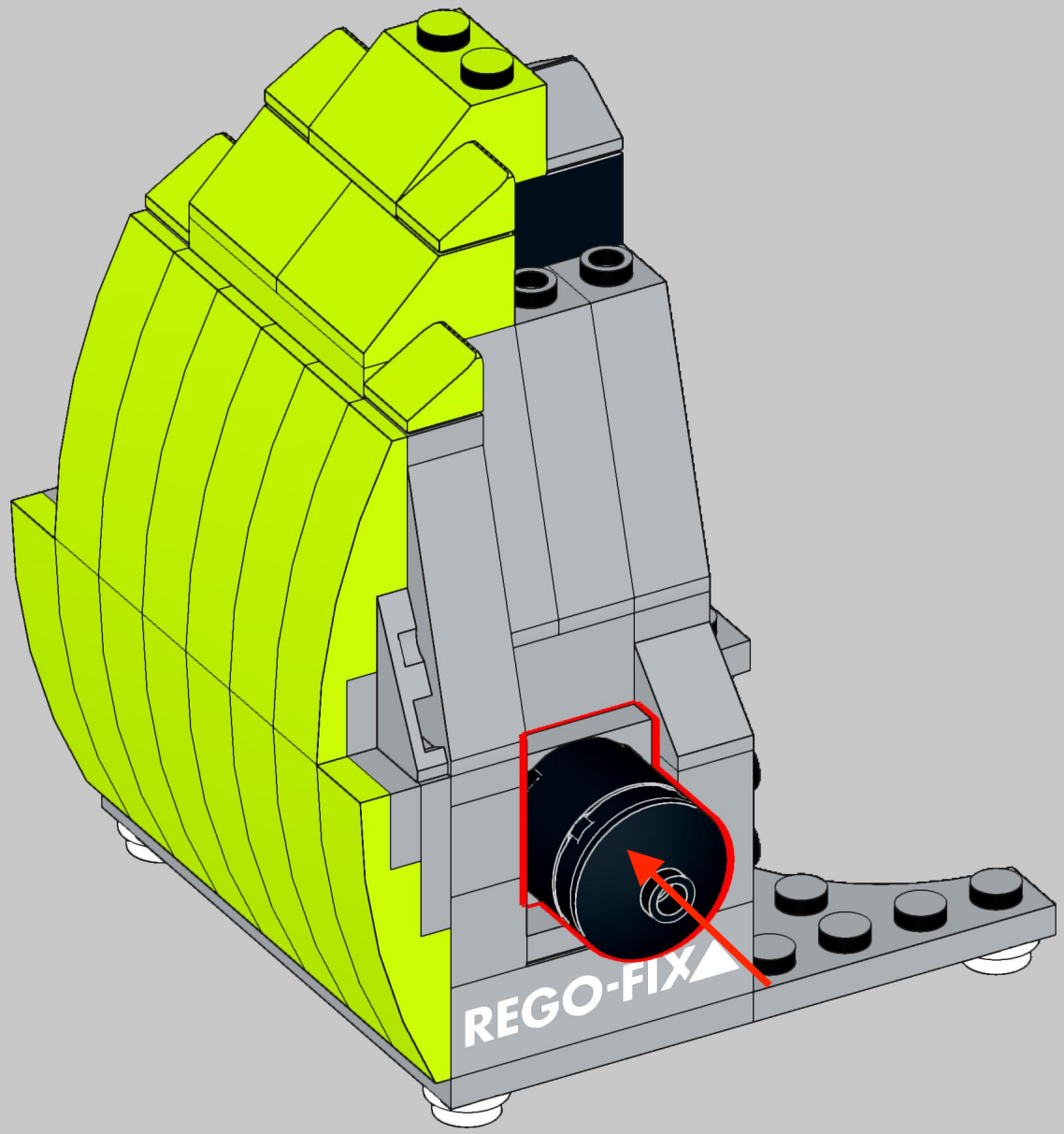

© 2024 WE LOVE WHAT YOU BUILD I wlwyb.com

26

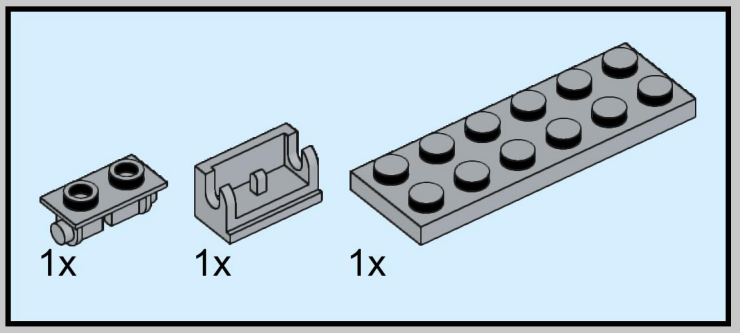

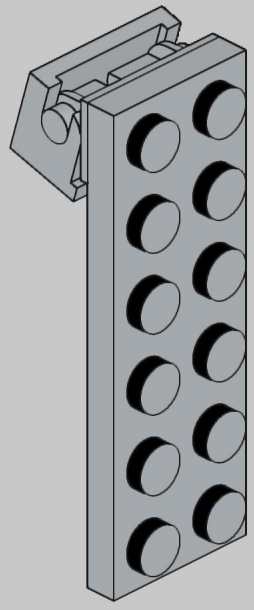

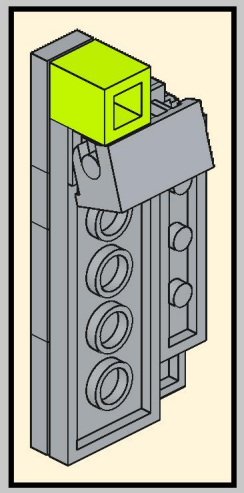

© 2024 WE LOVE WHAT YOU BUILD I wlwyb.com

27

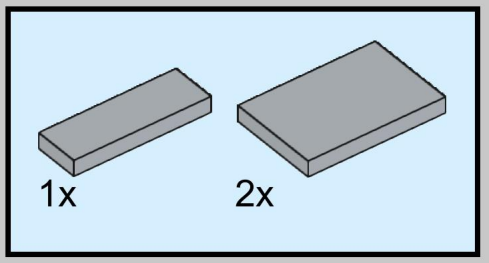

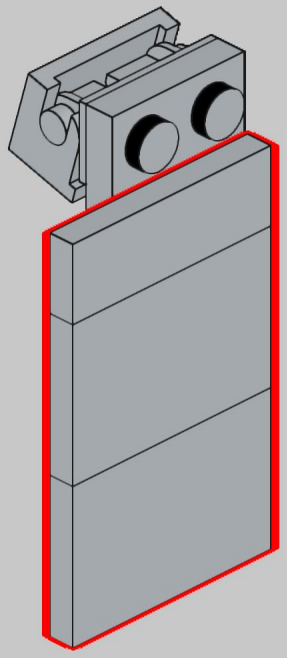

© 2024 WE LOVE WHAT YOU BUILD I wlwyb.com

28

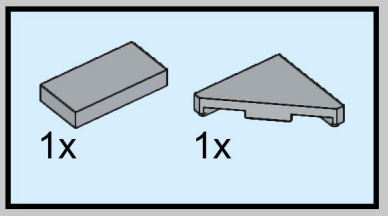

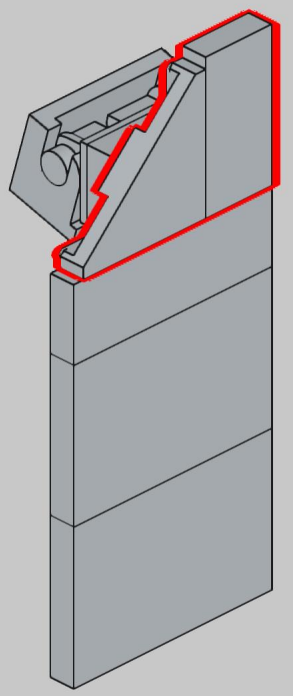

© 2024 WE LOVE WHAT YOU BUILD I wlwyb.com

29

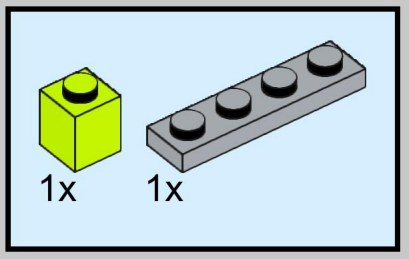

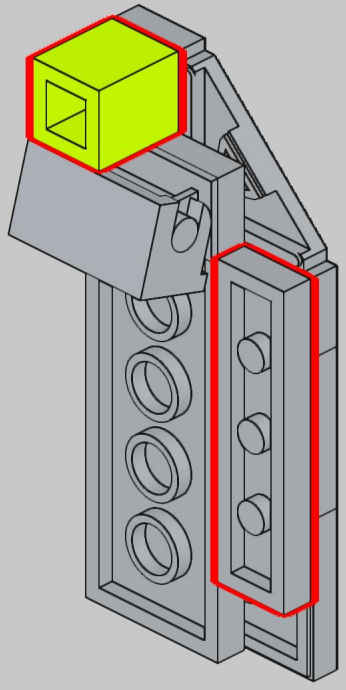

© 2024 WE LOVE WHAT YOU BUILD I wlwyb.com

30

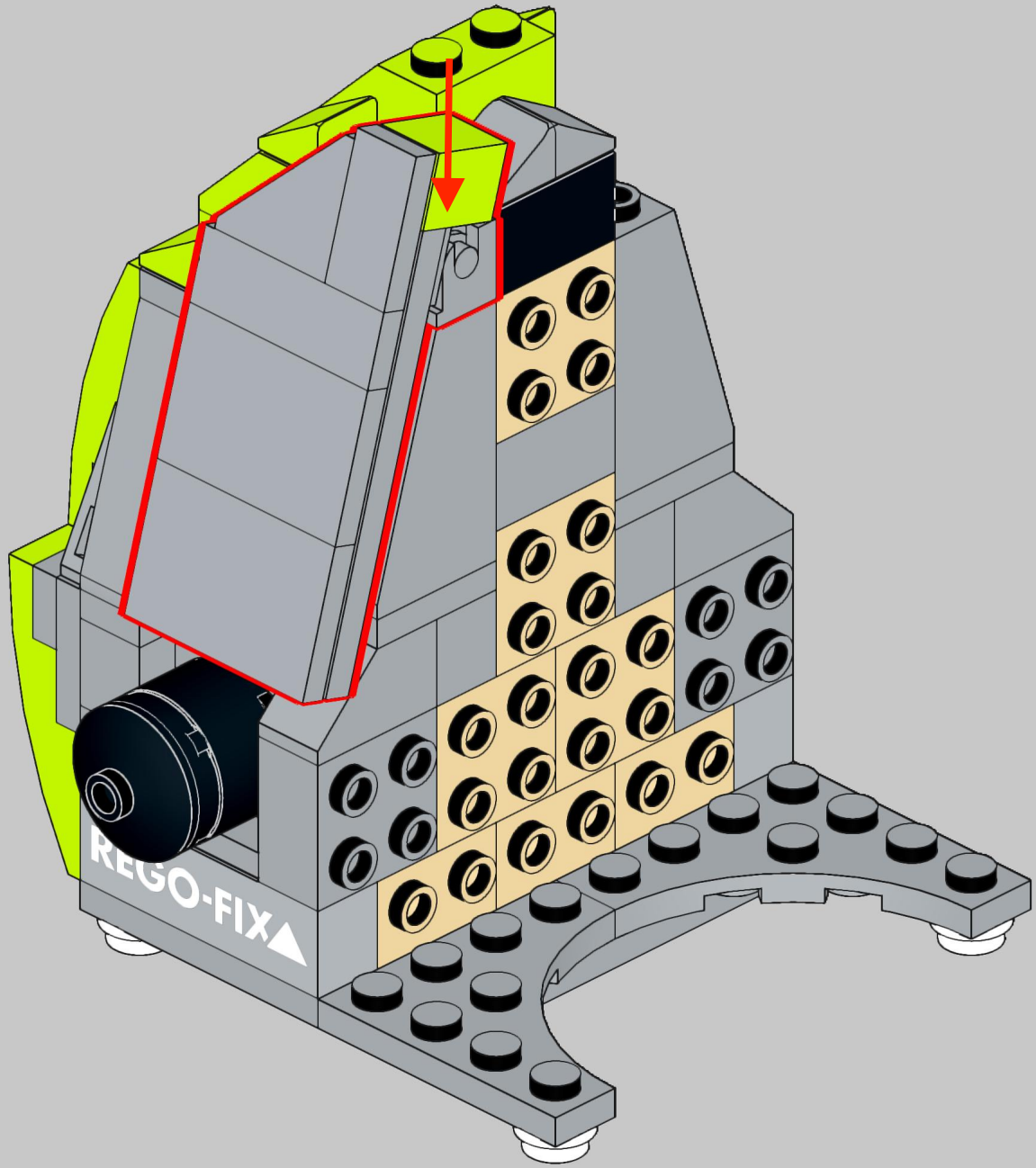

© 2024 WE LOVE WHAT YOU BUILD I wlwyb.com

31

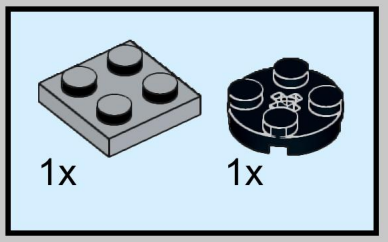

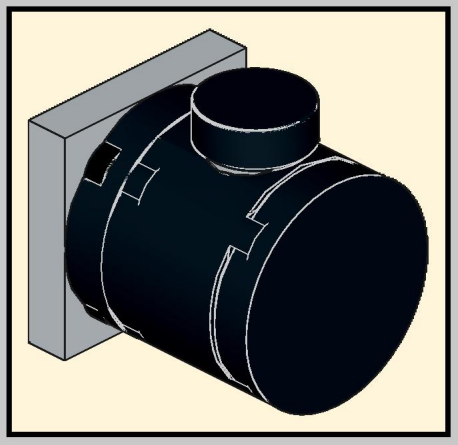

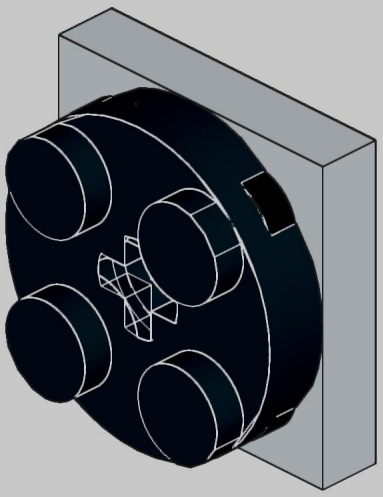

© 2024 WE LOVE WHAT YOU BUILD I wlwyb.com

32

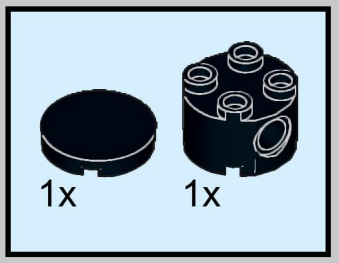

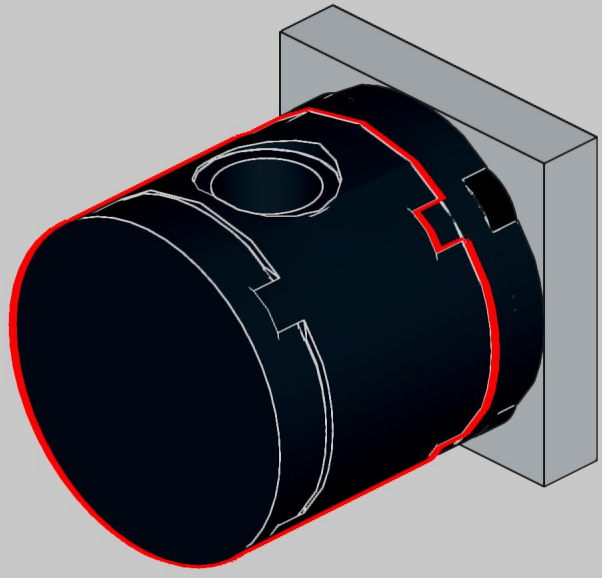

© 2024 WE LOVE WHAT YOU BUILD I wlwyb.com

33

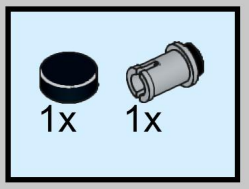

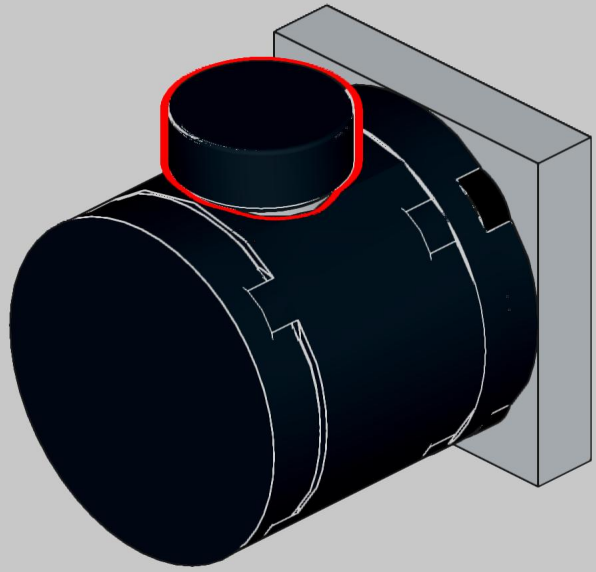

© 2024 WE LOVE WHAT YOU BUILD I wlwyb.com

34

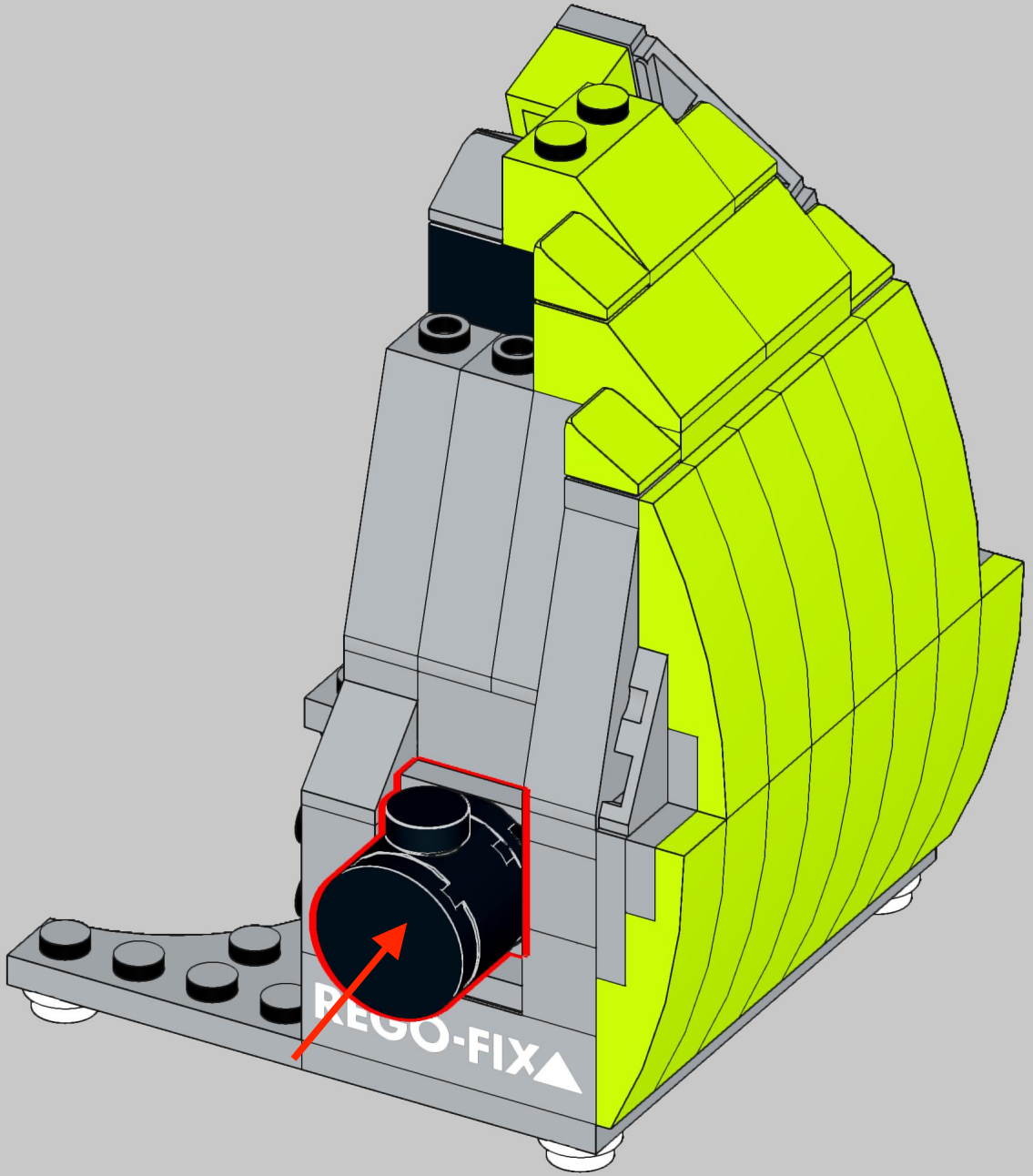

© 2024 WE LOVE WHAT YOU BUILD I wlwyb.com

35

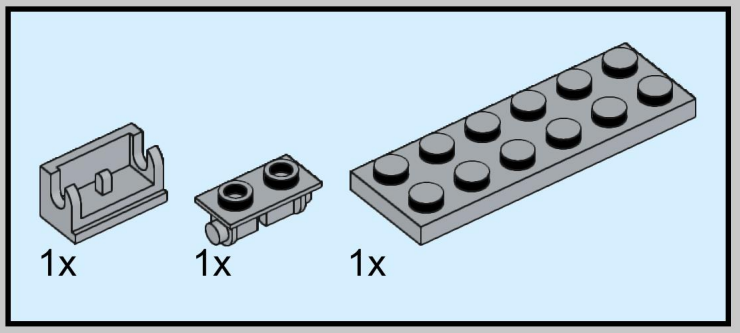

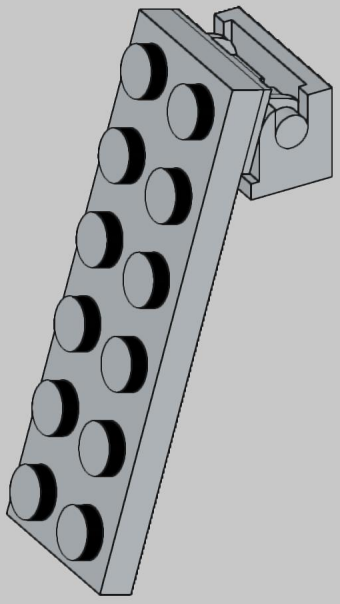

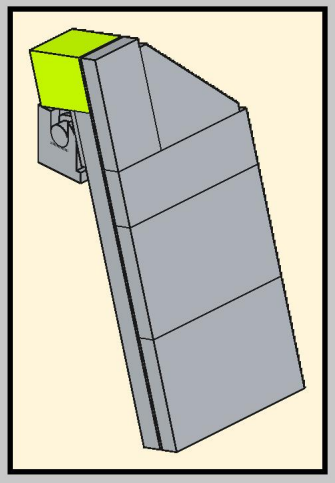

© 2024 WE LOVE WHAT YOU BUILD I wlwyb.com

36

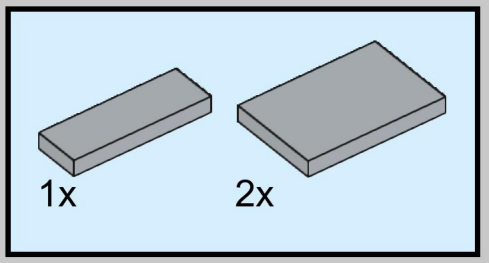

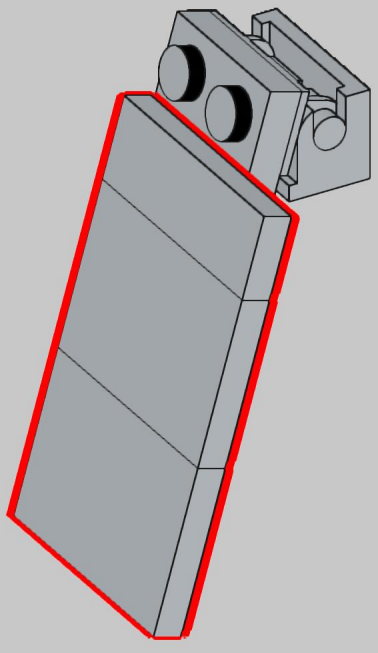

© 2024 WE LOVE WHAT YOU BUILD I wlwyb.com

37

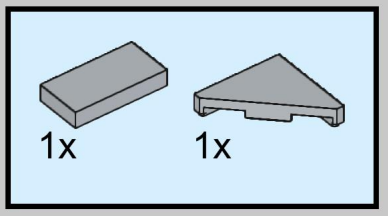

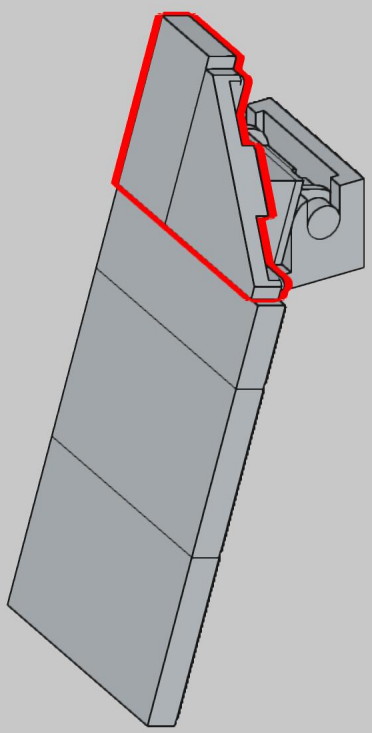

© 2024 WE LOVE WHAT YOU BUILD I wlwyb.com

38

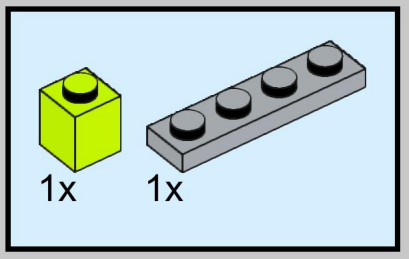

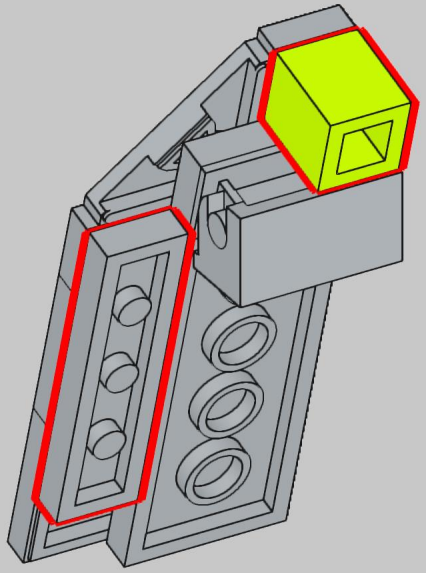

© 2024 WE LOVE WHAT YOU BUILD I wlwyb.com

39

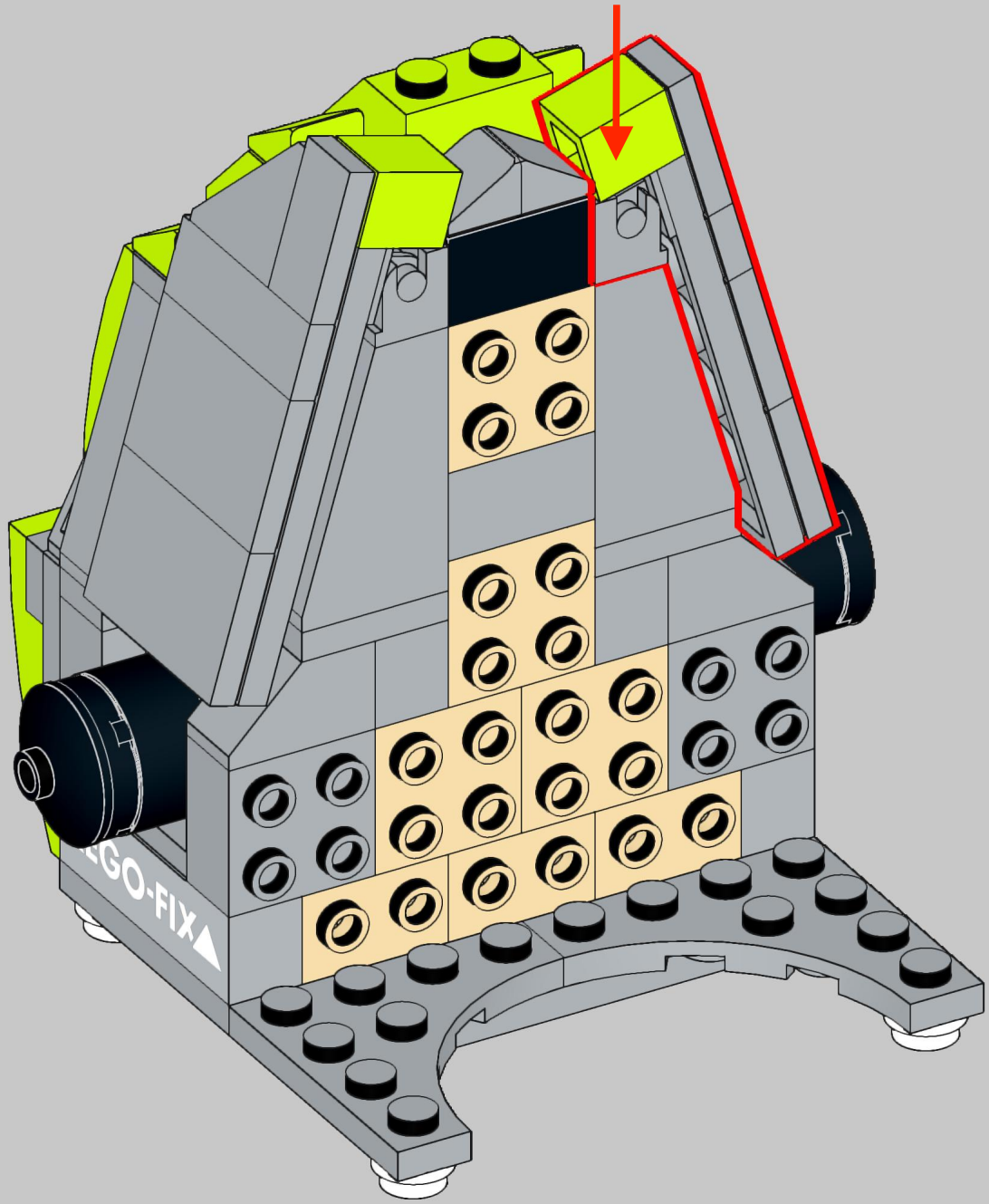

© 2024 WE LOVE WHAT YOU BUILD I wlwyb.com

40

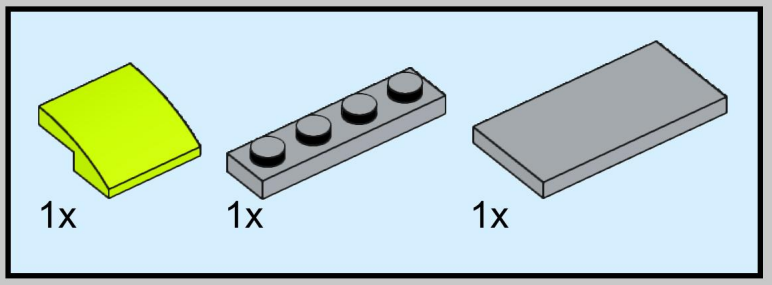

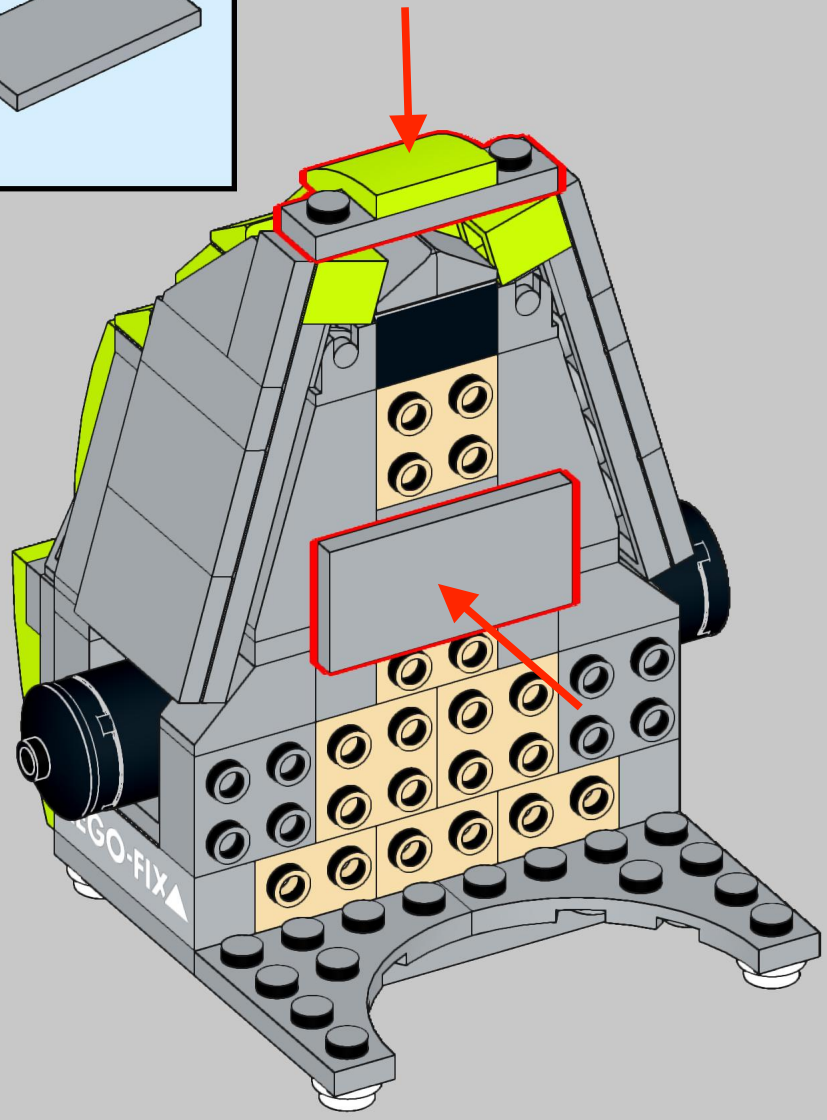

© 2024 WE LOVE WHAT YOU BUILD I wlwyb.com

41

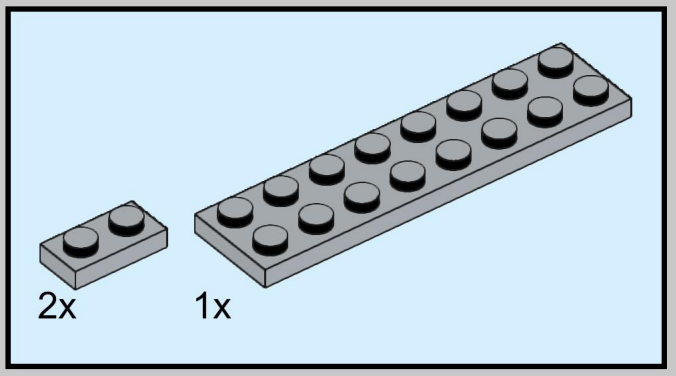

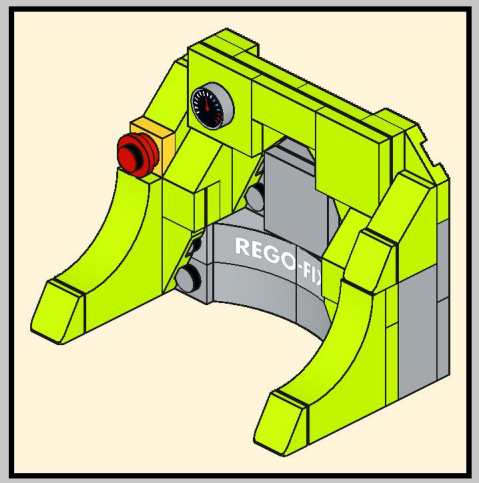

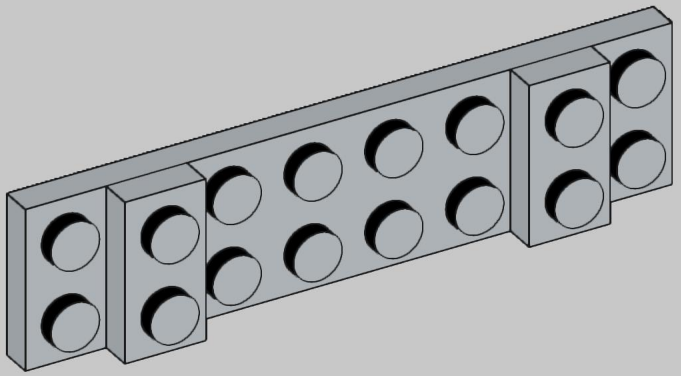

© 2024 WE LOVE WHAT YOU BUILD I wlwyb.com

42

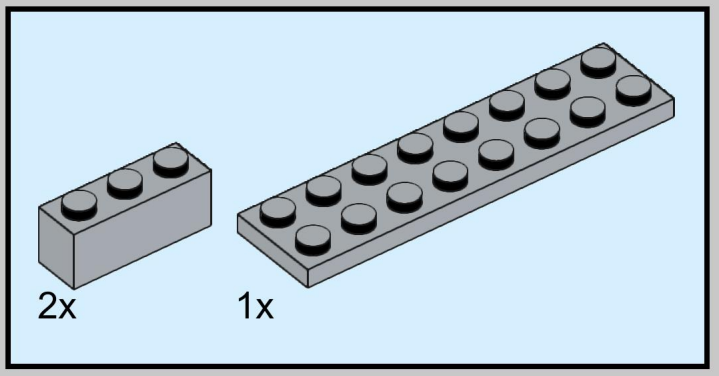

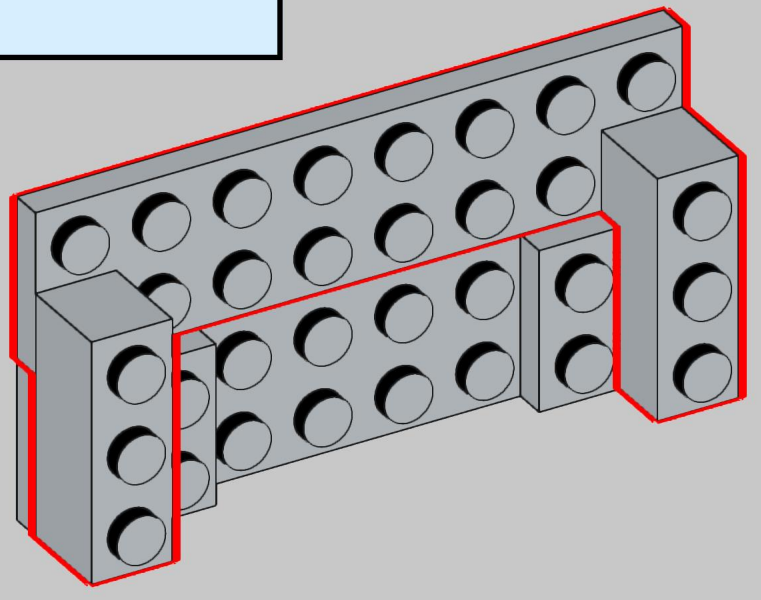

© 2024 WE LOVE WHAT YOU BUILD I wlwyb.com

43

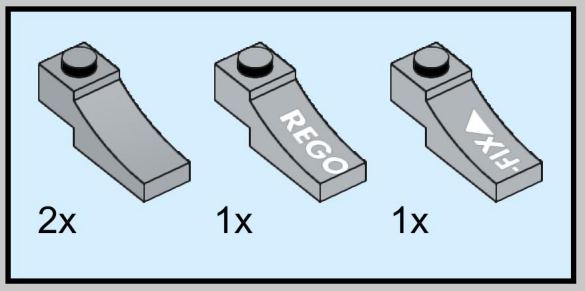

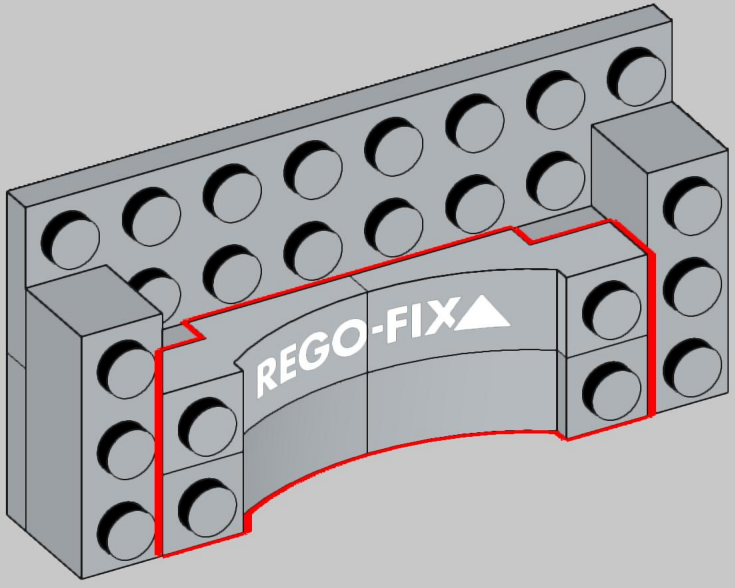

© 2024 WE LOVE WHAT YOU BUILD I wlwyb.com

44

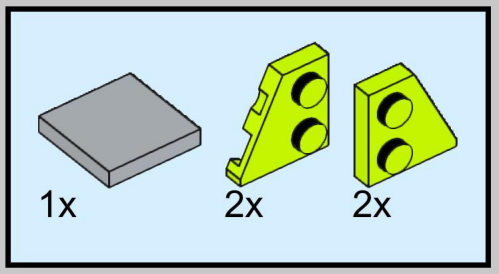

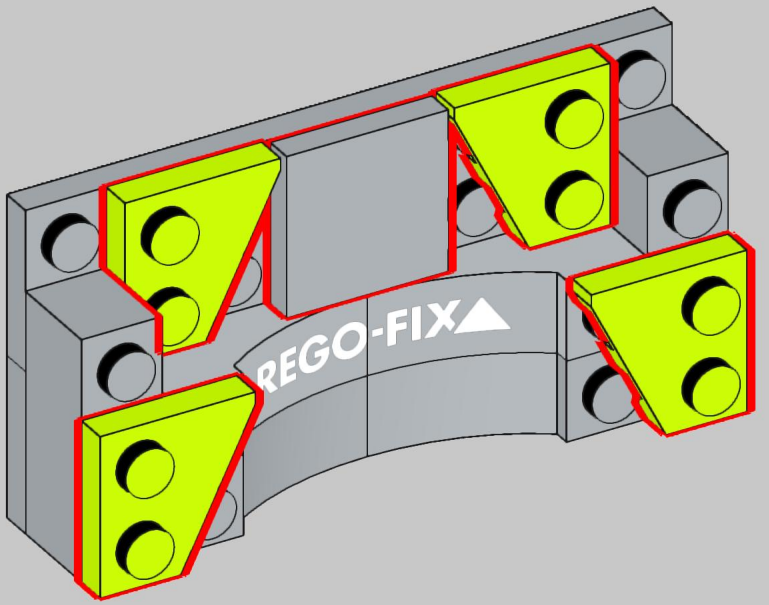

© 2024 WE LOVE WHAT YOU BUILD I wlwyb.com

45

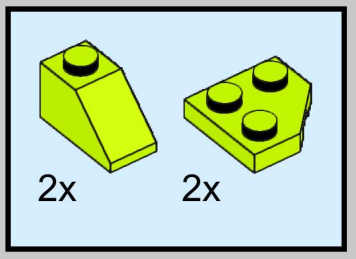

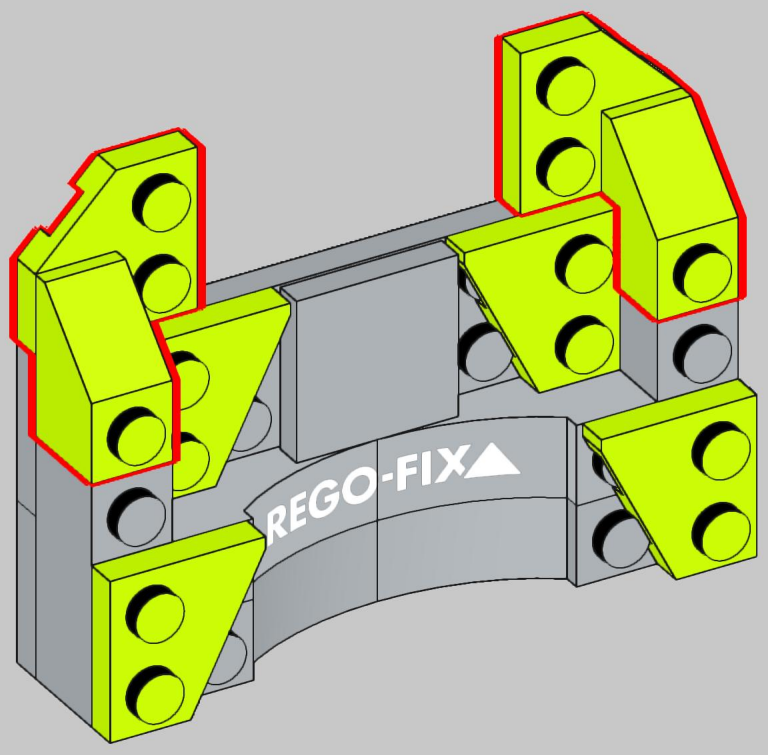

© 2024 WE LOVE WHAT YOU BUILD I wlwyb.com

46

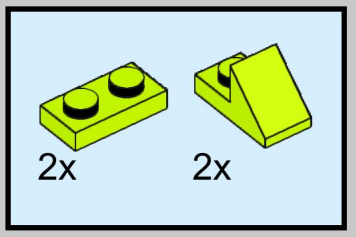

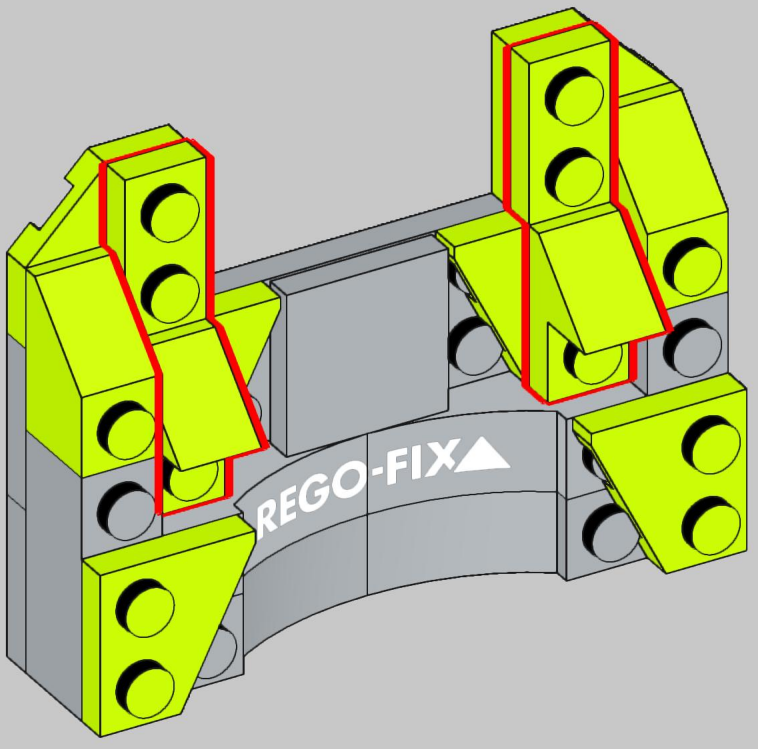

© 2024 WE LOVE WHAT YOU BUILD I wlwyb.com

47

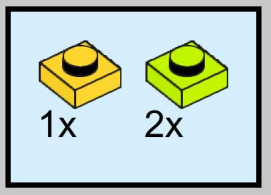

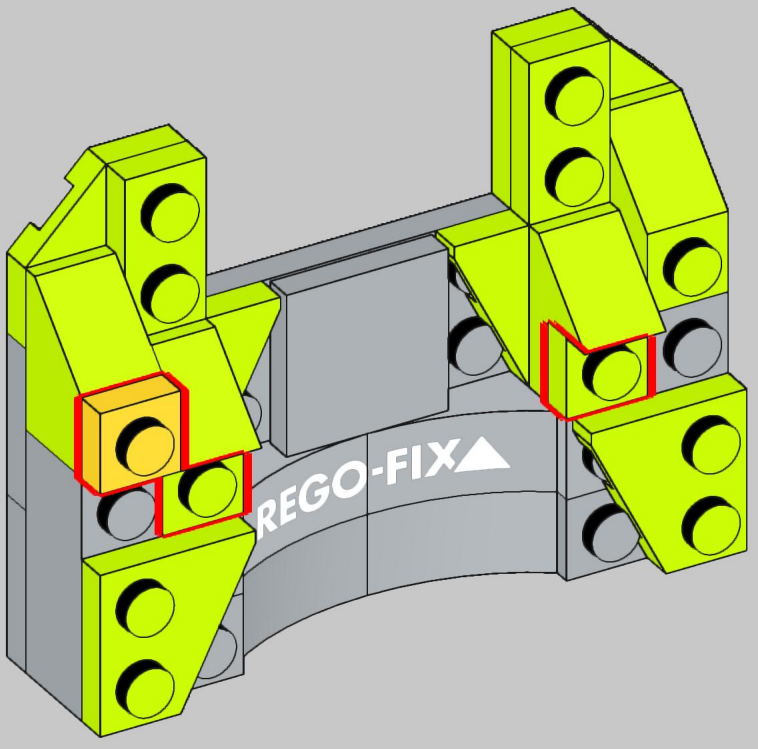

© 2024 WE LOVE WHAT YOU BUILD I wlwyb.com

48

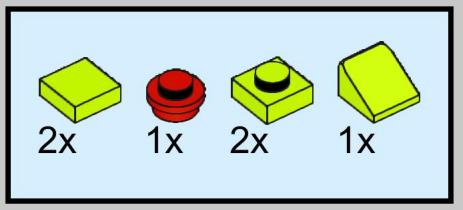

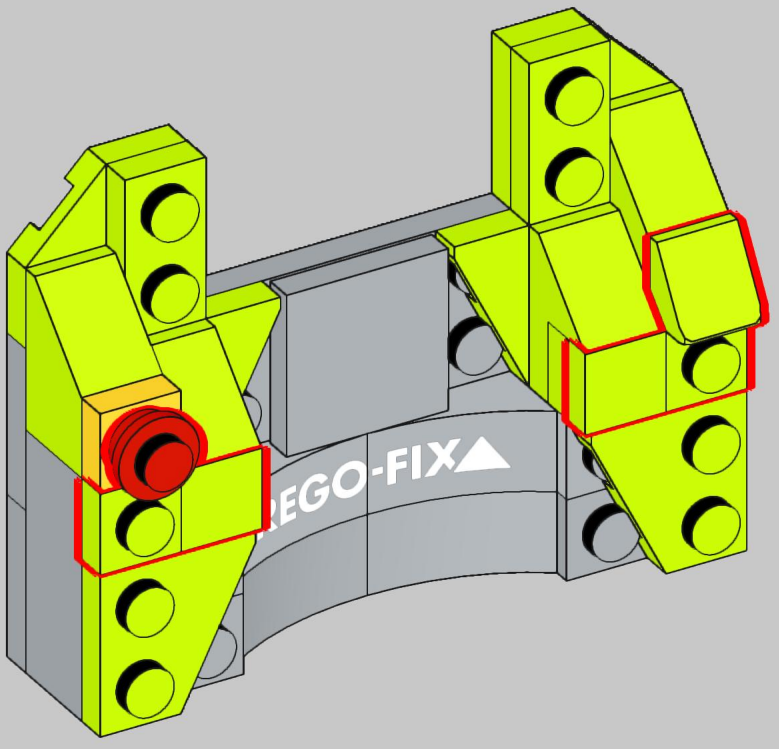

© 2024 WE LOVE WHAT YOU BUILD I wlwyb.com

49

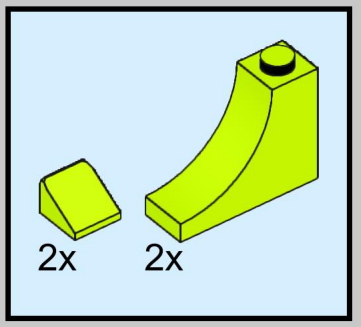

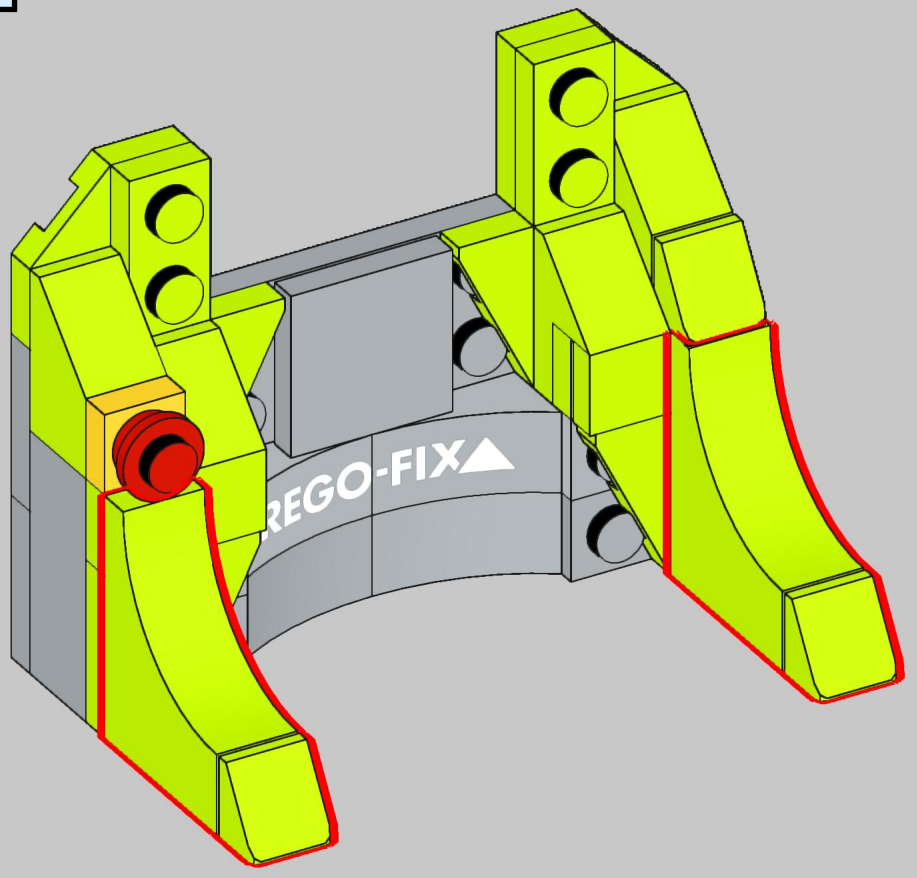

© 2024 WE LOVE WHAT YOU BUILD I wlwyb.com

50

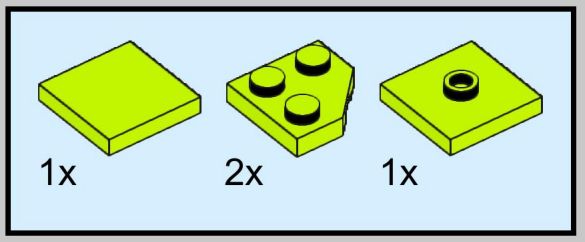

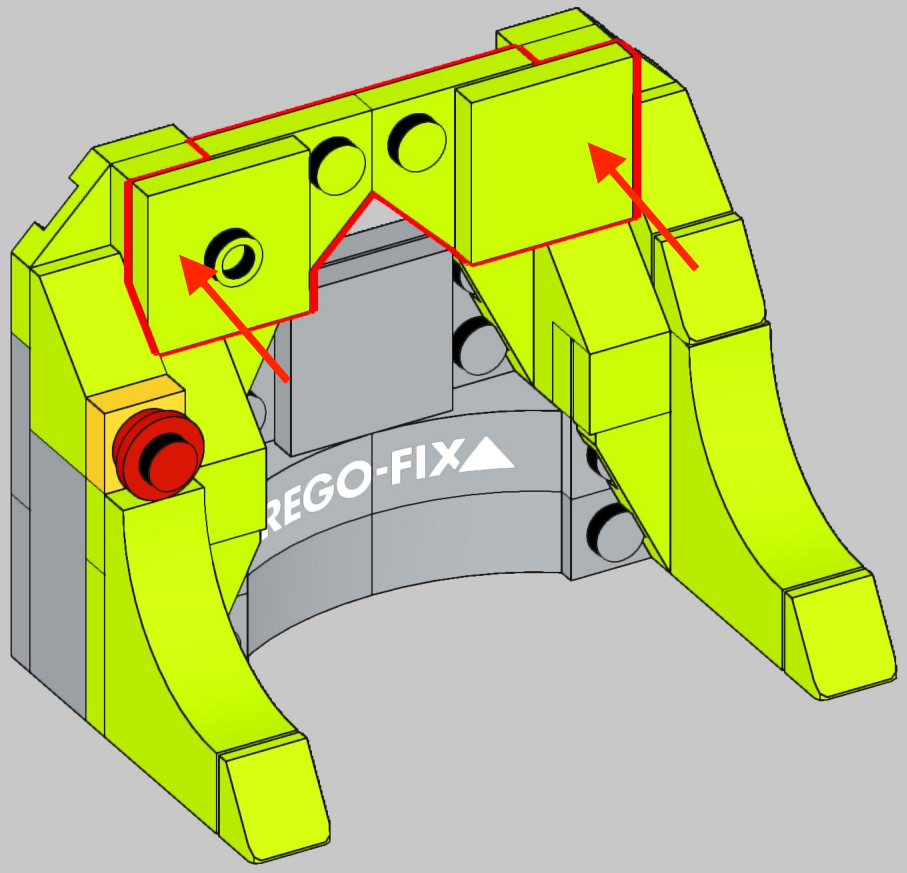

© 2024 WE LOVE WHAT YOU BUILD I wlwyb.com

51

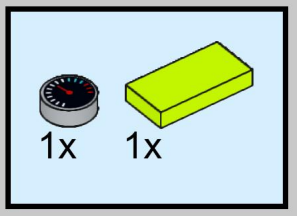

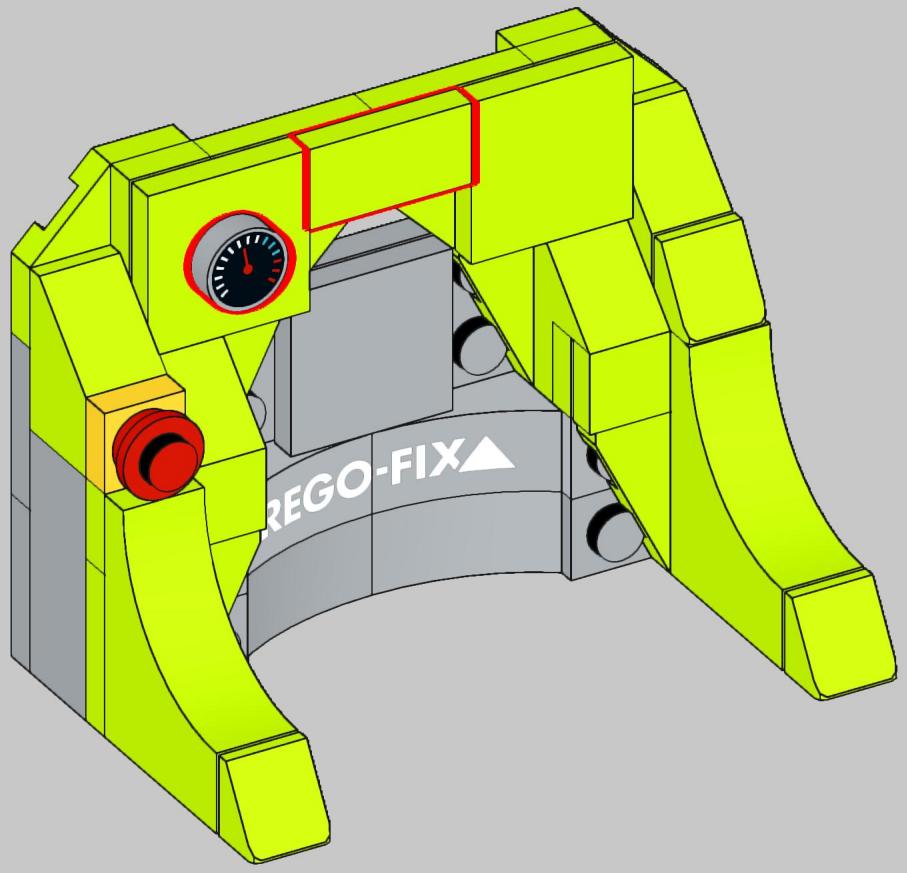

© 2024 WE LOVE WHAT YOU BUILD I wlwyb.com

52

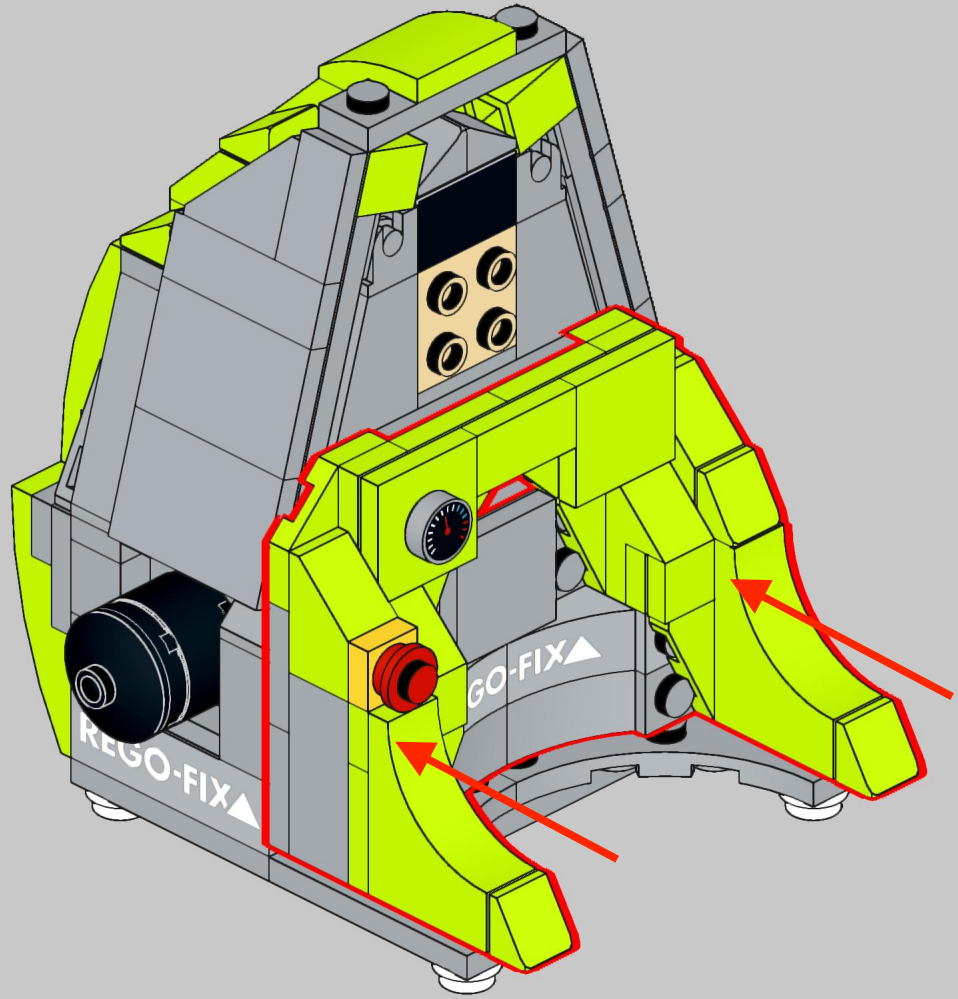

© 2024 WE LOVE WHAT YOU BUILD I wlwyb.com

53

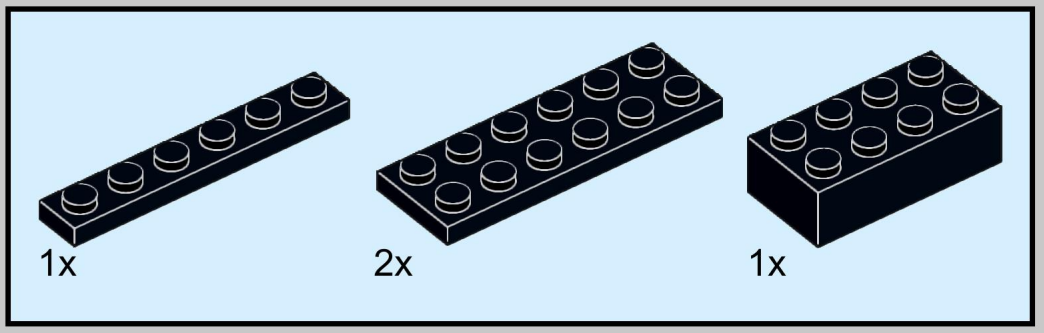

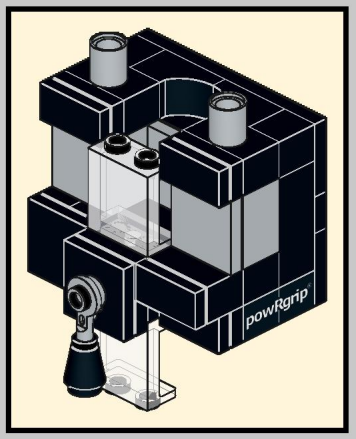

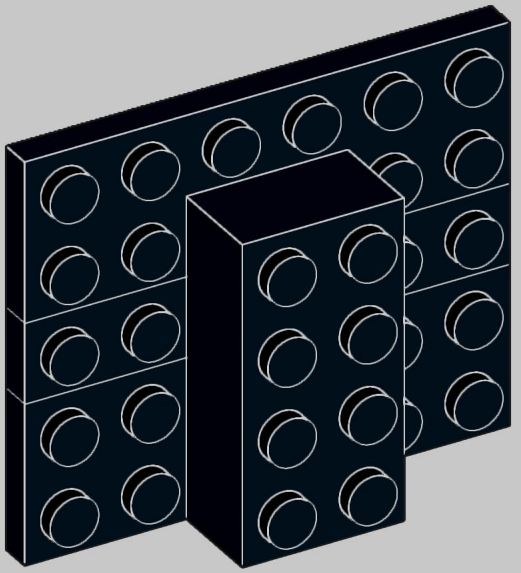

© 2024 WE LOVE WHAT YOU BUILD I wlwyb.com

54

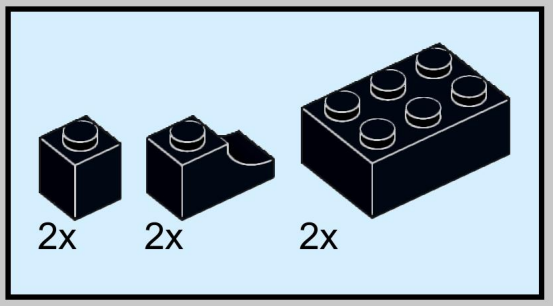

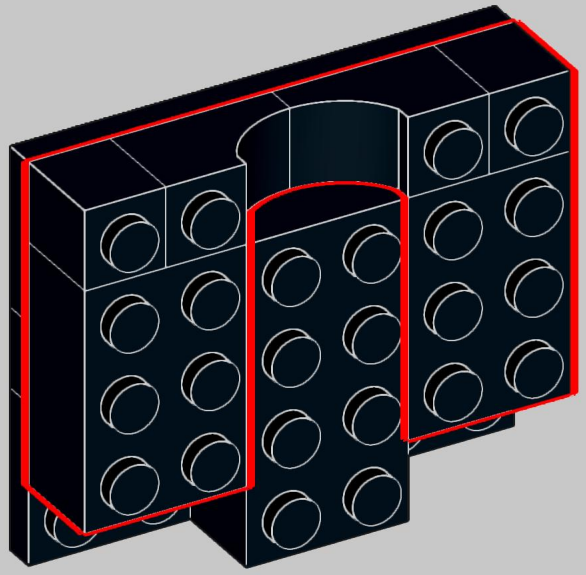

© 2024 WE LOVE WHAT YOU BUILD I wlwyb.com

55

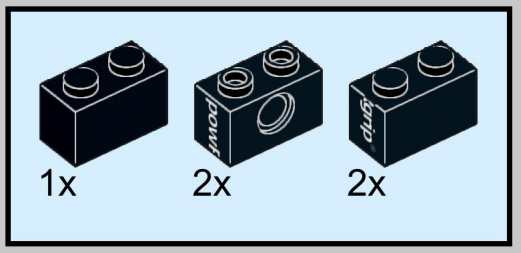

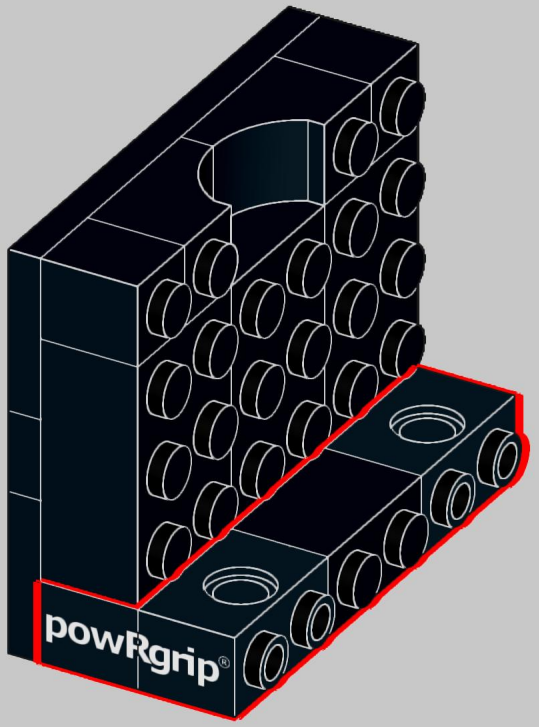

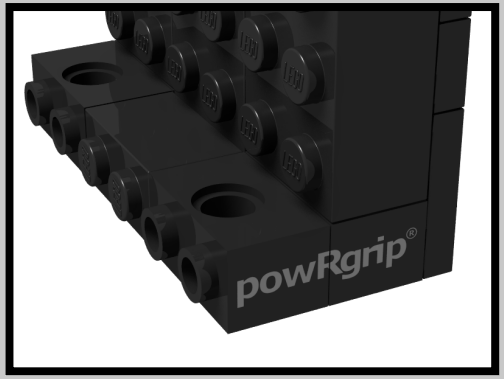

Use left and right side of printed parts correctly

© 2024 WE LOVE WHAT YOU BUILD I wlwyb.com

56

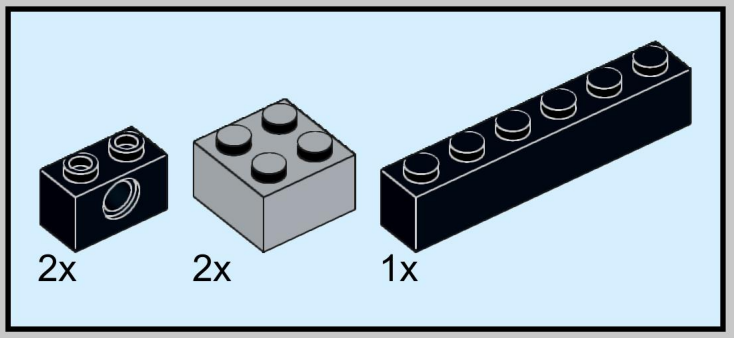

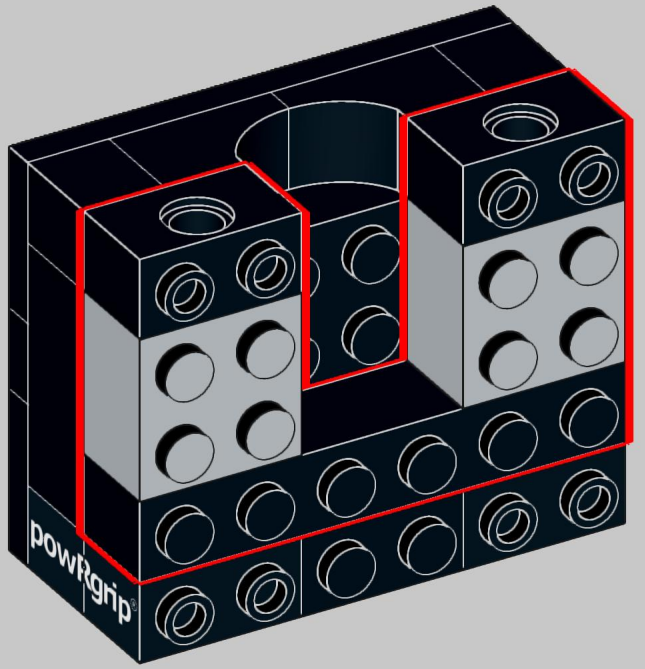

© 2024 WE LOVE WHAT YOU BUILD I wlwyb.com

57

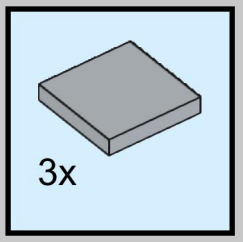

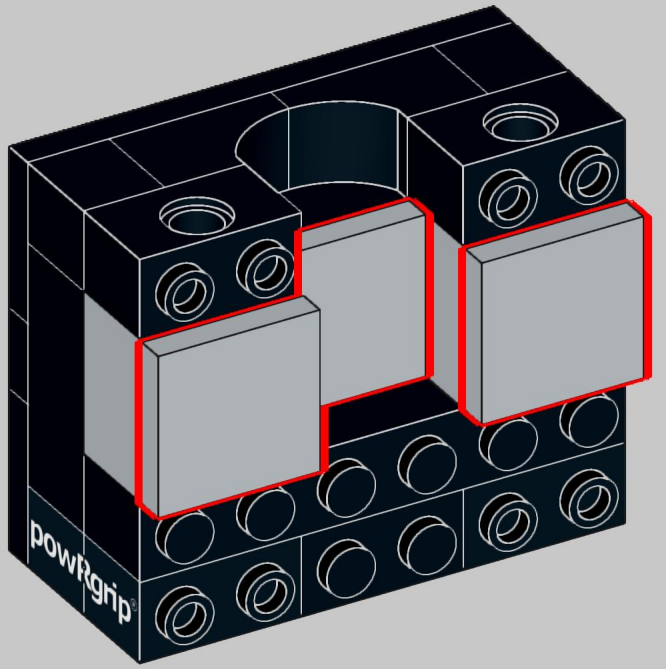

© 2024 WE LOVE WHAT YOU BUILD I wlwyb.com

58

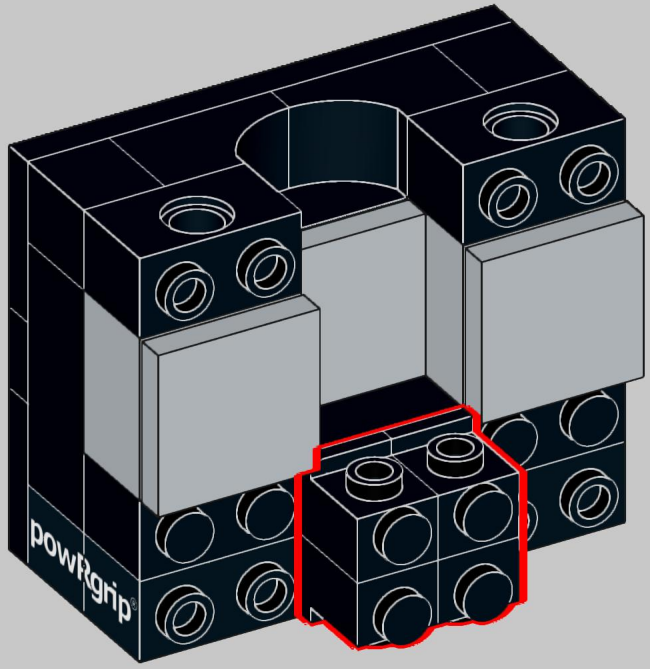

© 2024 WE LOVE WHAT YOU BUILD I wlwyb.com

59

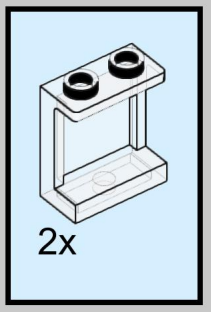

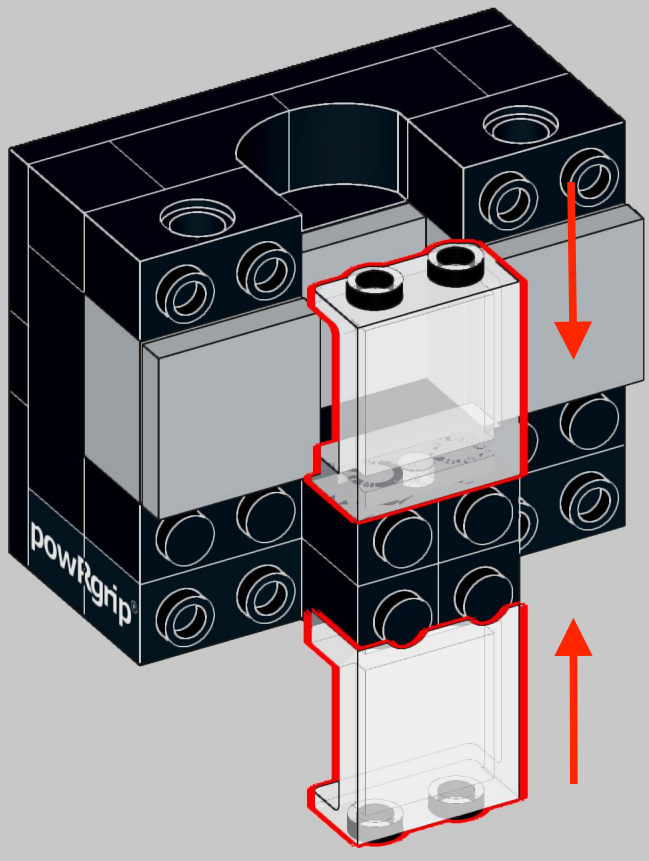

© 2024 WE LOVE WHAT YOU BUILD I wlwyb.com

60

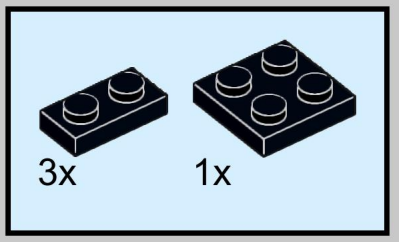

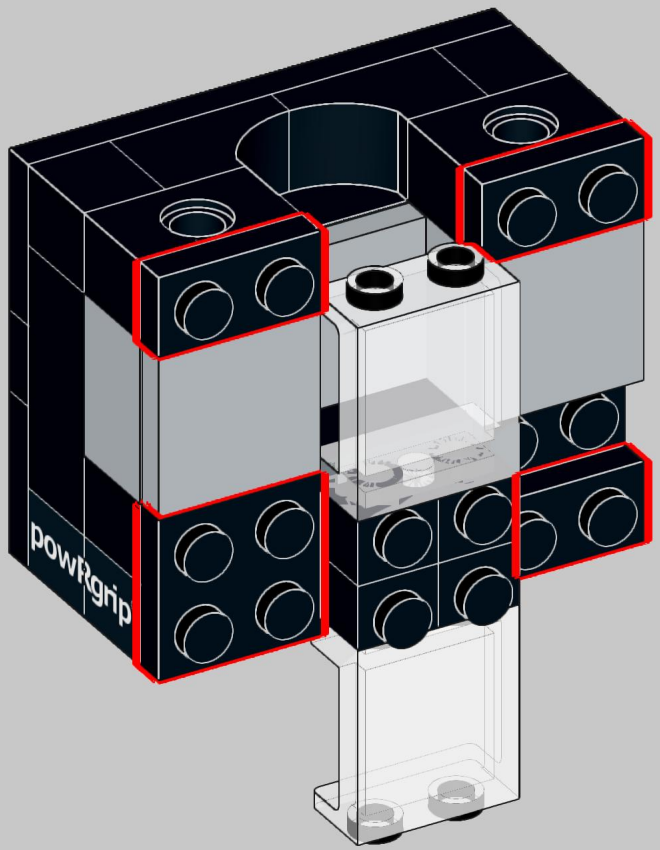

© 2024 WE LOVE WHAT YOU BUILD I wlwyb.com

61

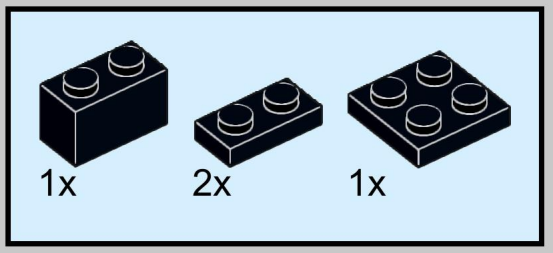

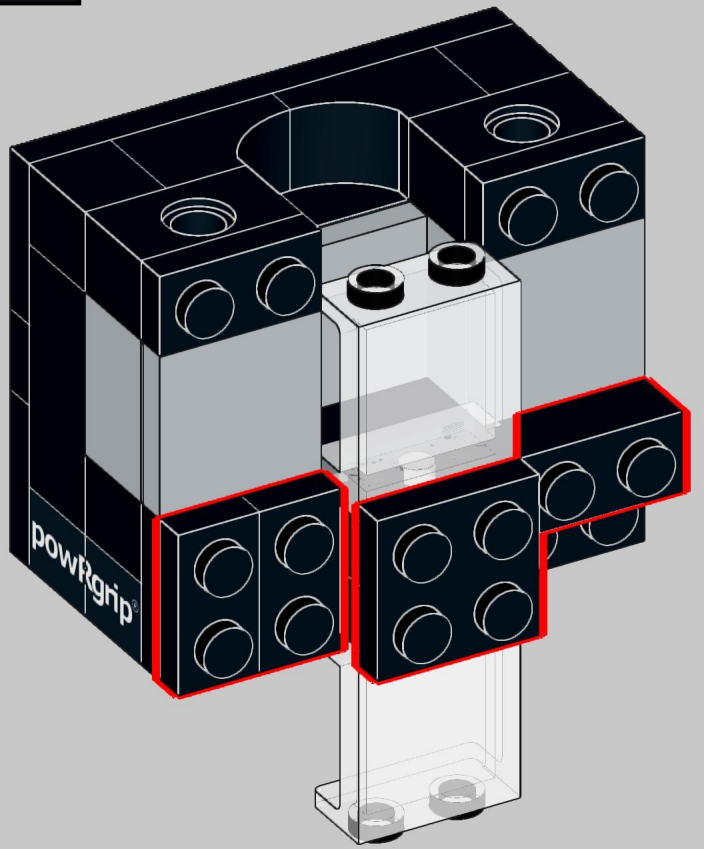

© 2024 WE LOVE WHAT YOU BUILD I wlwyb.com

62

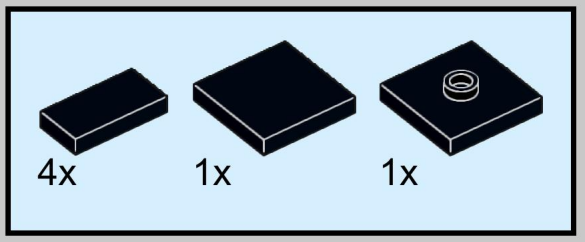

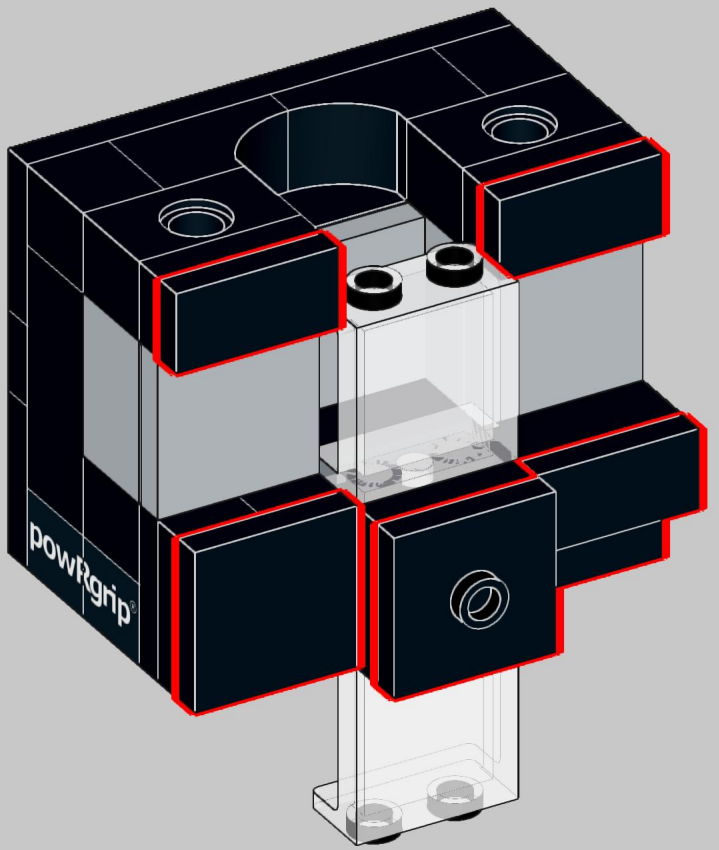

© 2024 WE LOVE WHAT YOU BUILD I wlwyb.com

63

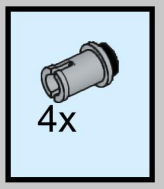

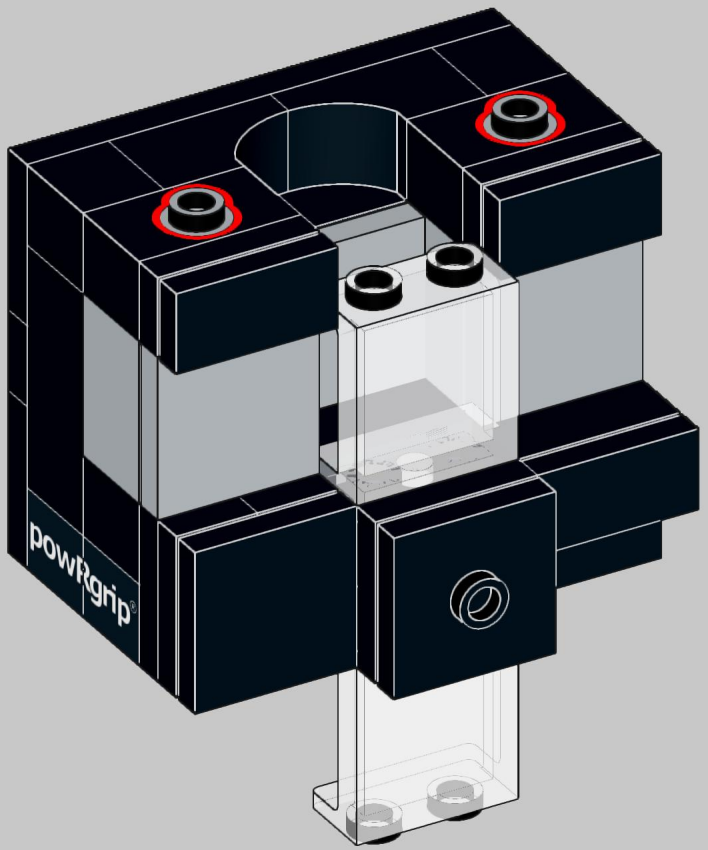

© 2024 WE LOVE WHAT YOU BUILD I wlwyb.com

64

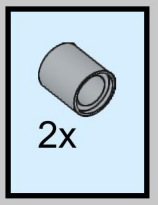

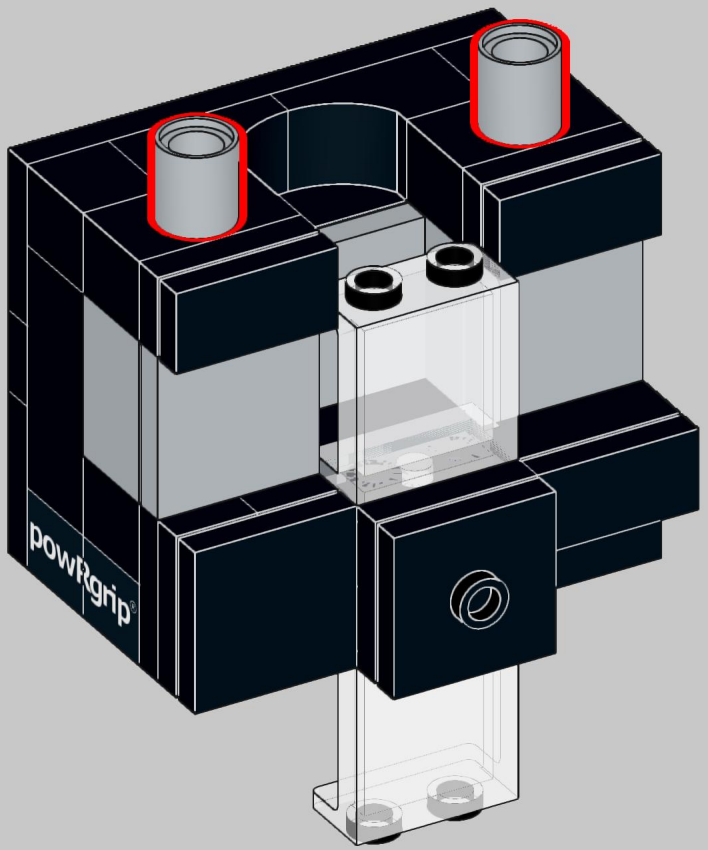

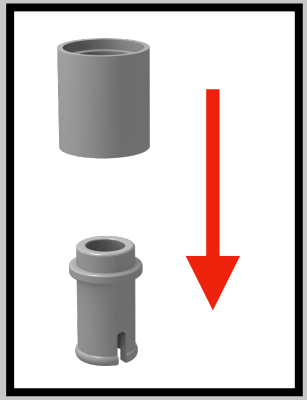

© 2024 WE LOVE WHAT YOU BUILD I wlwyb.com

65

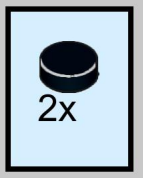

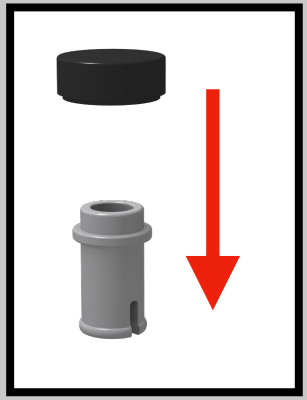

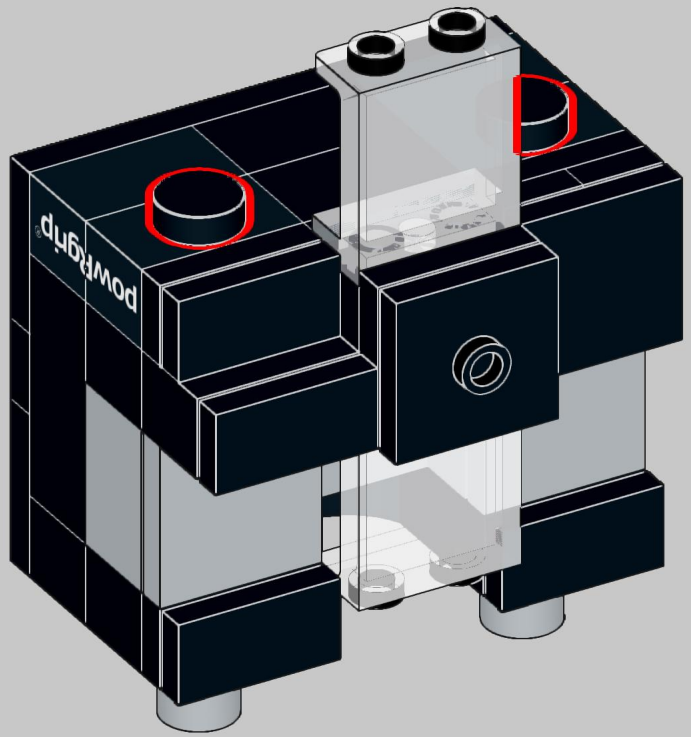

© 2024 WE LOVE WHAT YOU BUILD I wlwyb.com

66

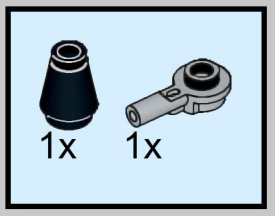

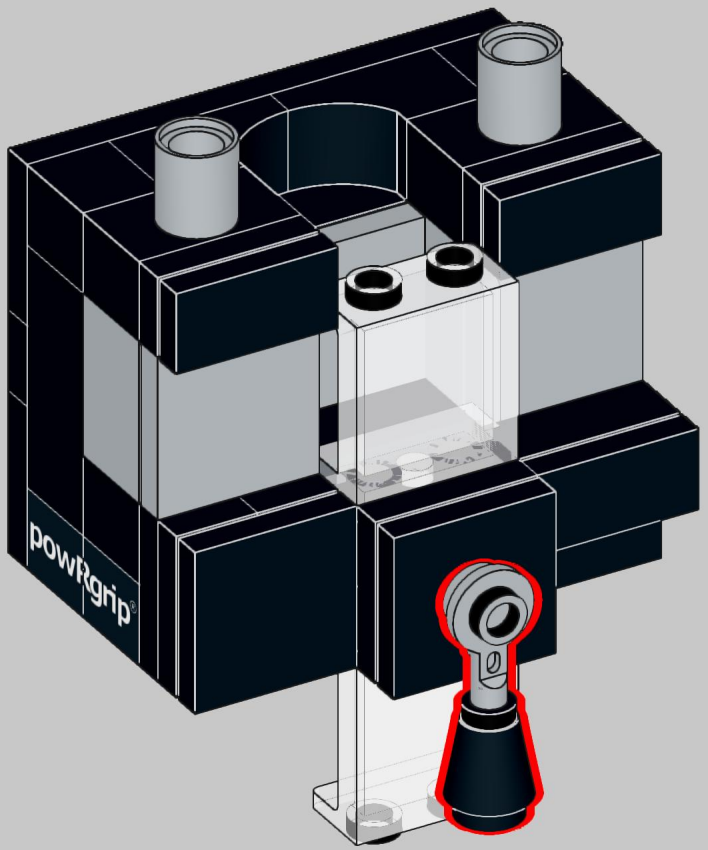

© 2024 WE LOVE WHAT YOU BUILD I wlwyb.com

67

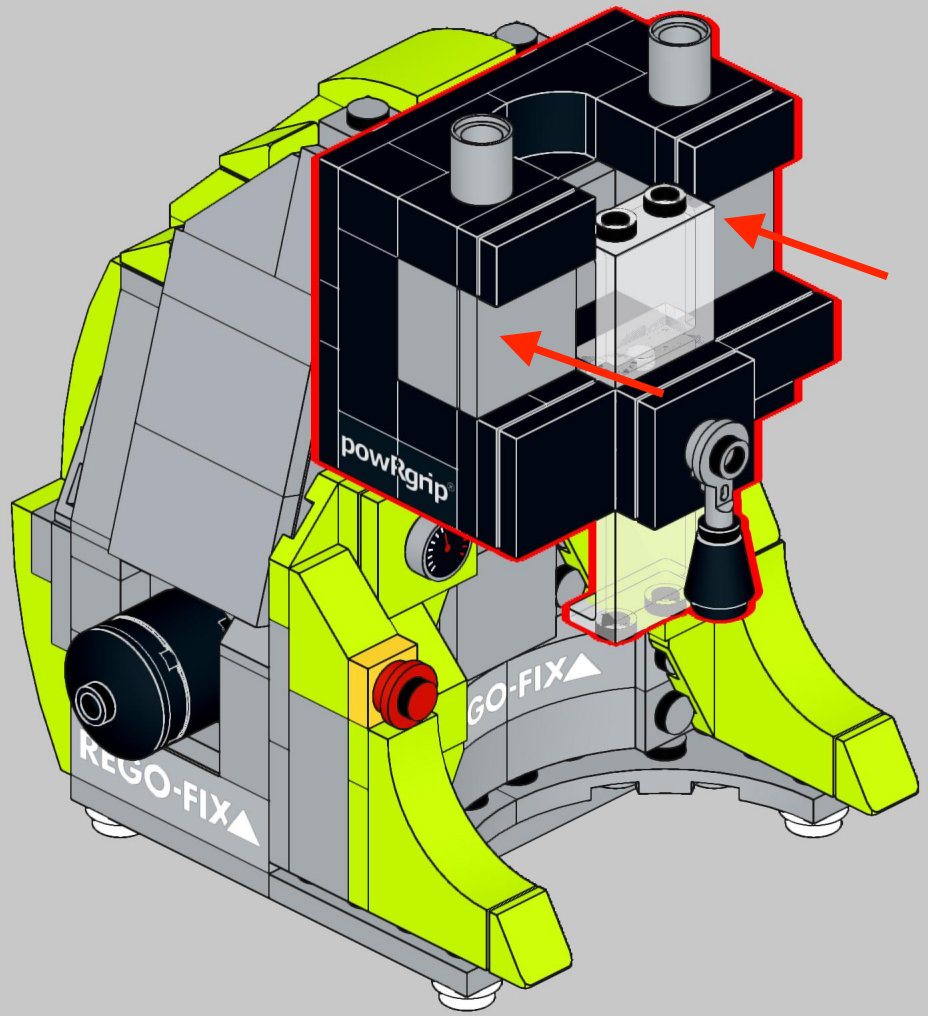

© 2024 WE LOVE WHAT YOU BUILD I wlwyb.com

68

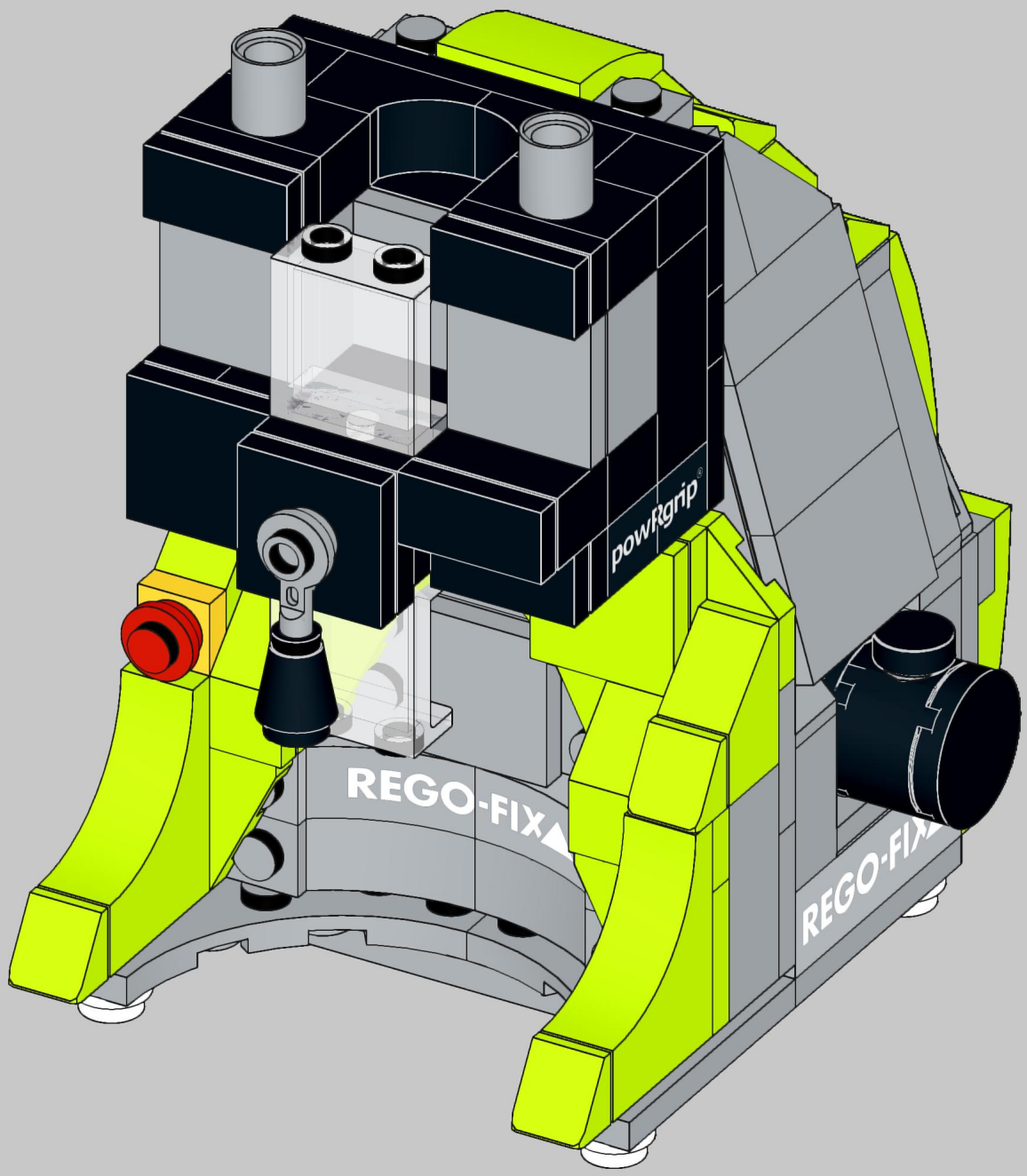

© 2024 WE LOVE WHAT YOU BUILD I wlwyb.com

This custom LEGO set
is proudly brought to you by
WE LOVE WHAT YOU BUILD,
consisting of brand new bricks
parted out from LEGO sets

© 2024 WE LOVE WHAT YOU BUILD I wlwyb.com